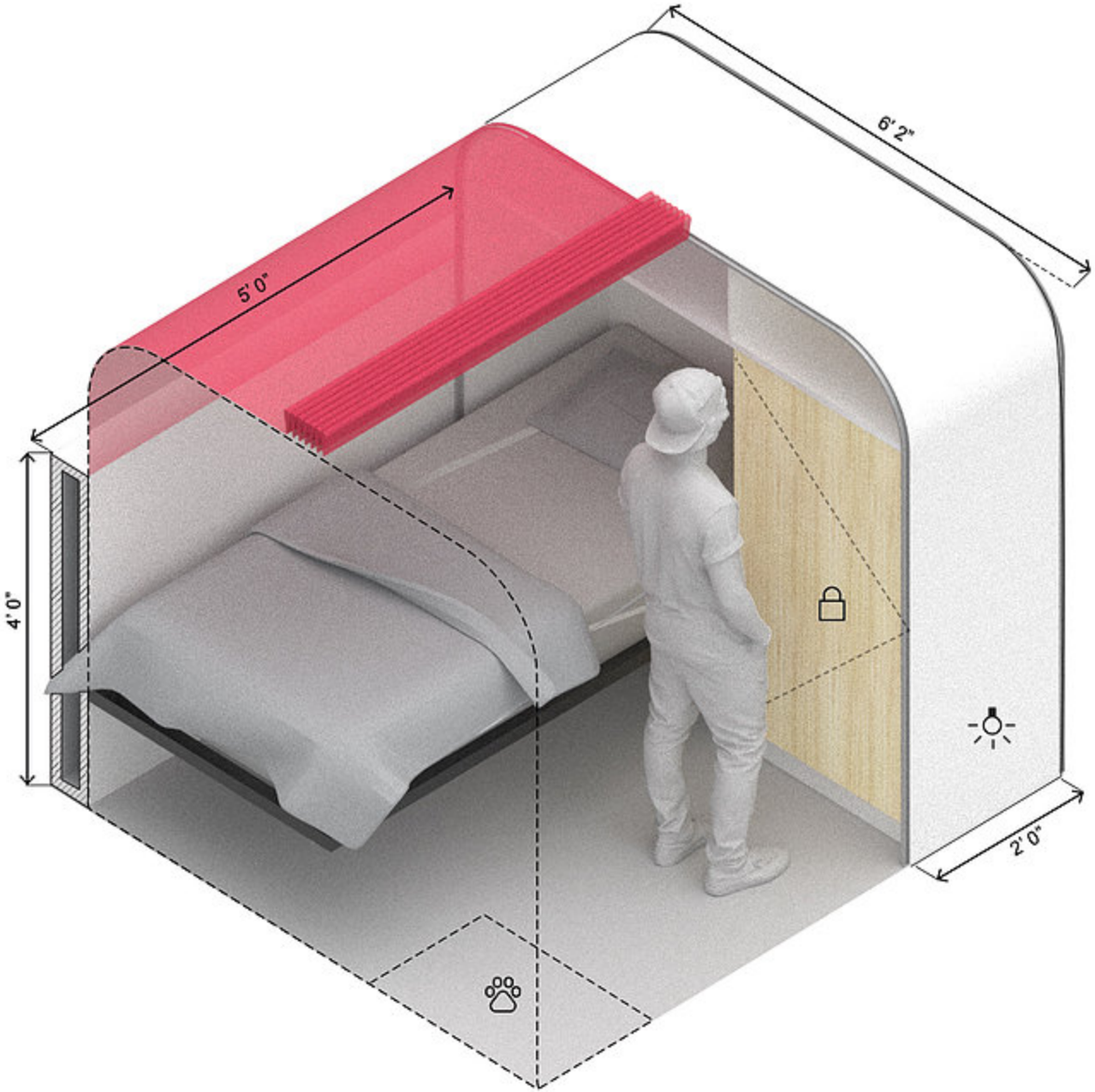
6' 2"
5' 0"
4' 0"
2' 0"

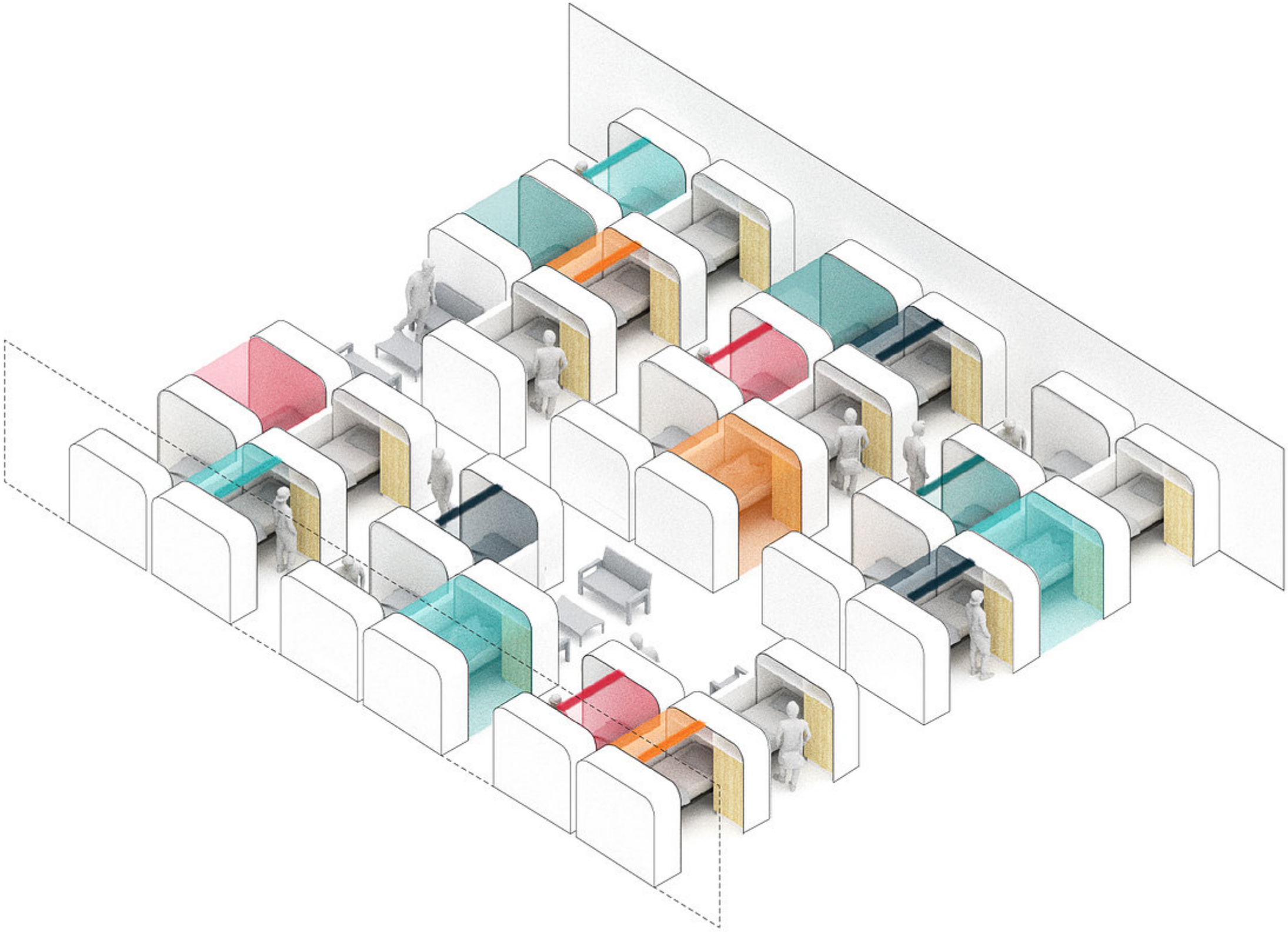

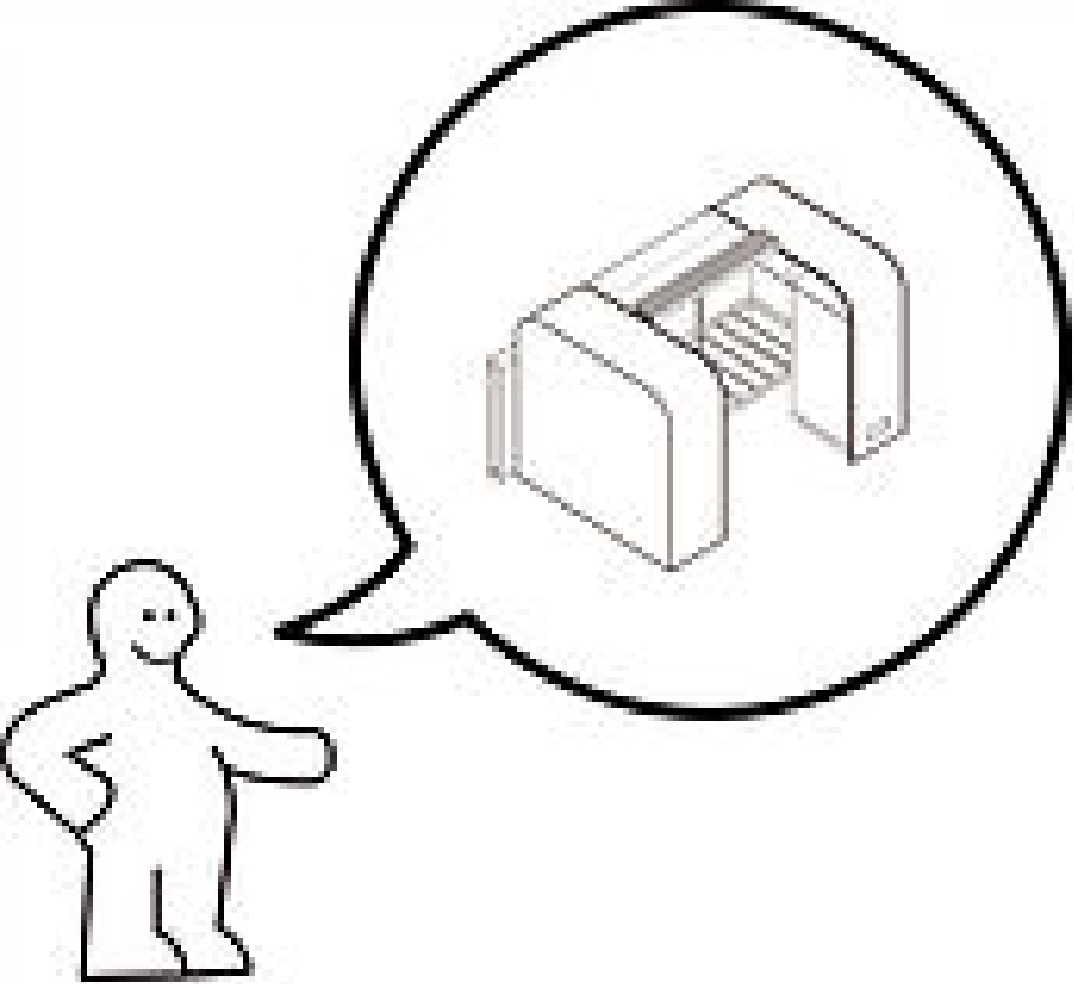

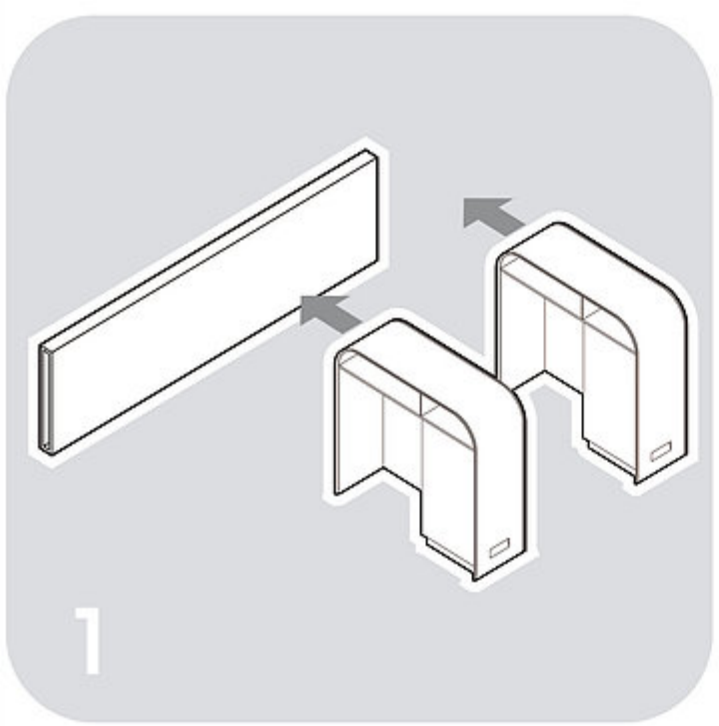
1

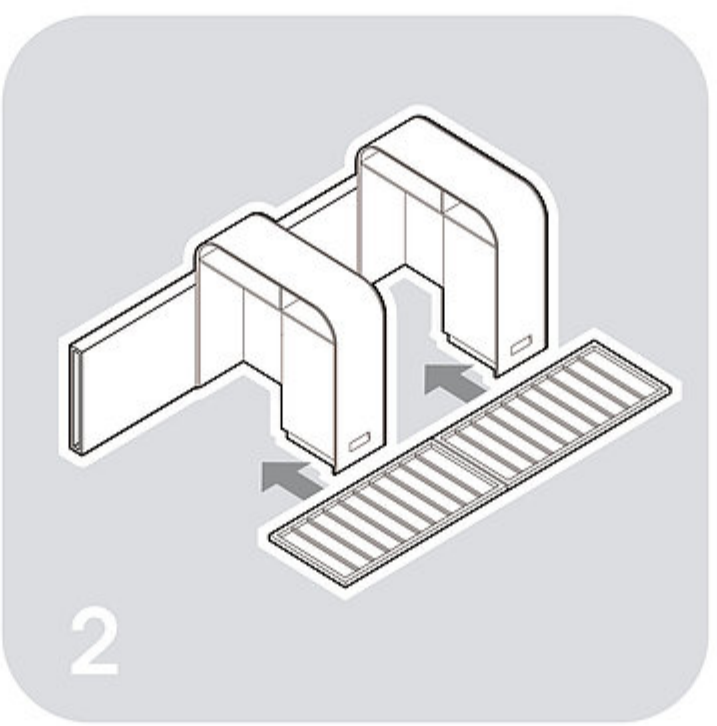
2

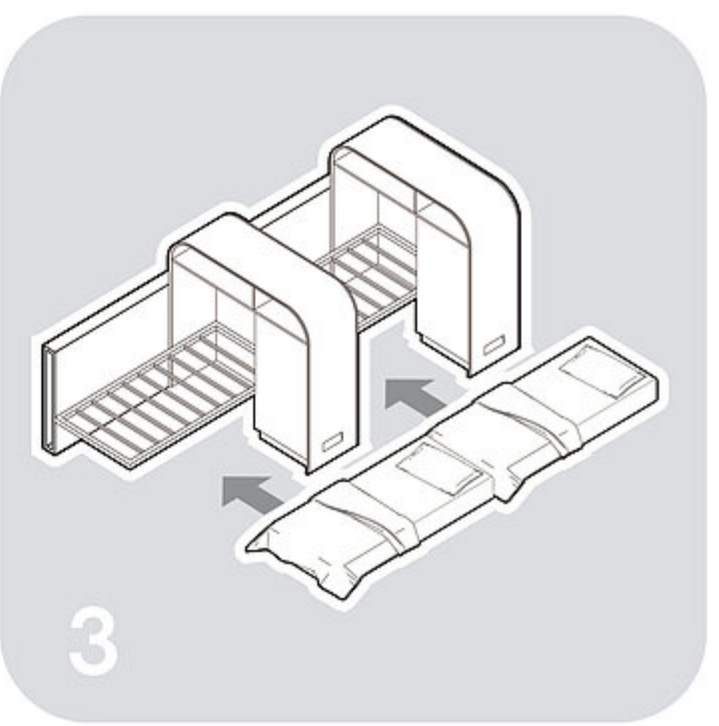
3

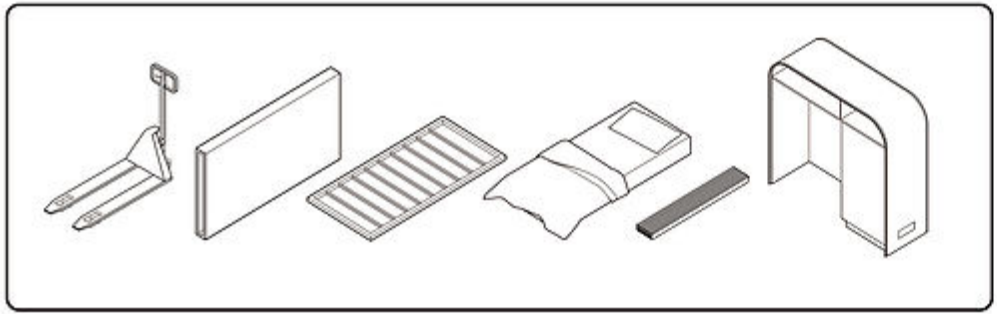

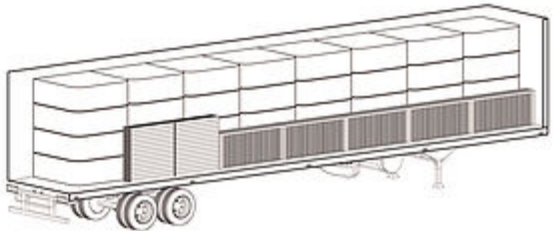

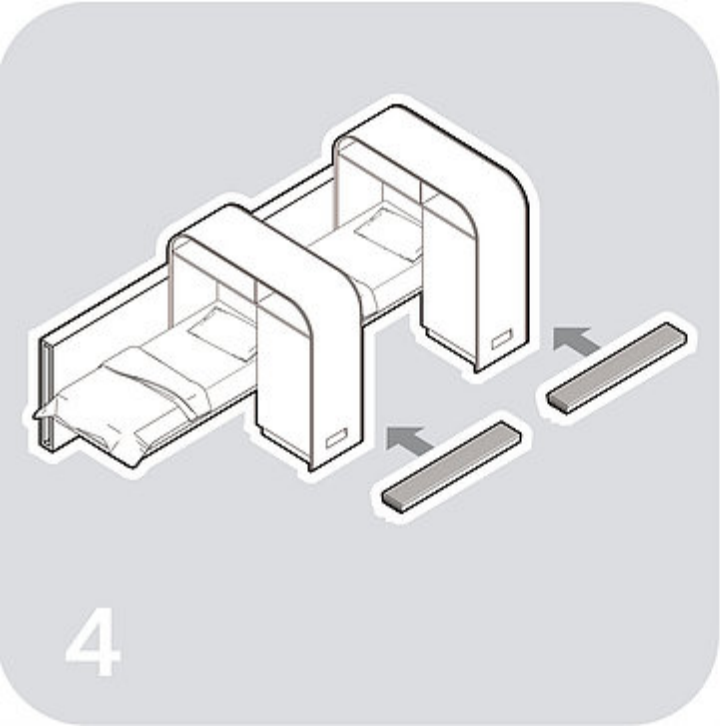
4

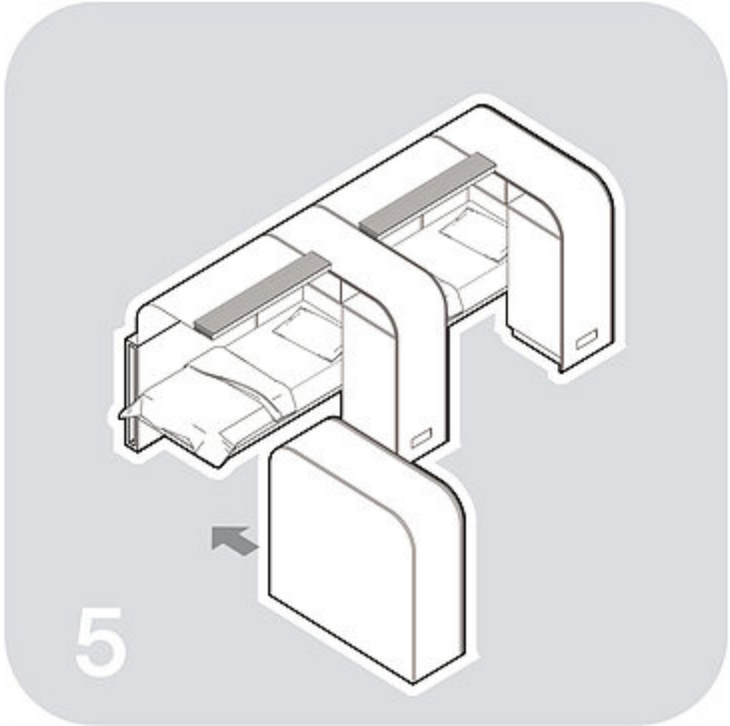
5

6

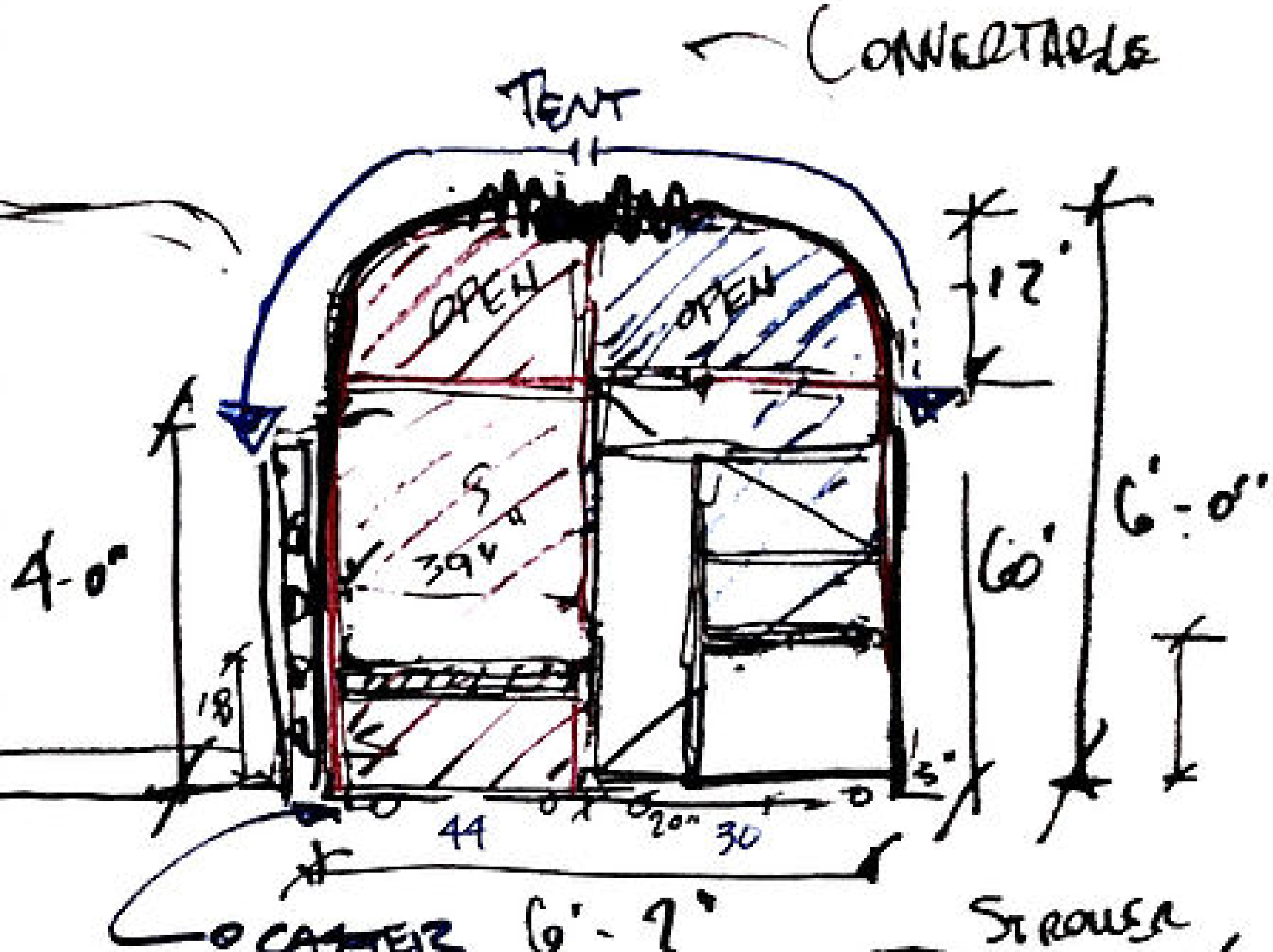
CONVERTABLE
TENT
OPEN
OPEN
12"
6'-0"
60"
4-0"
39"
18
44
20"
30
CASTER
6'-7"
STROLLER

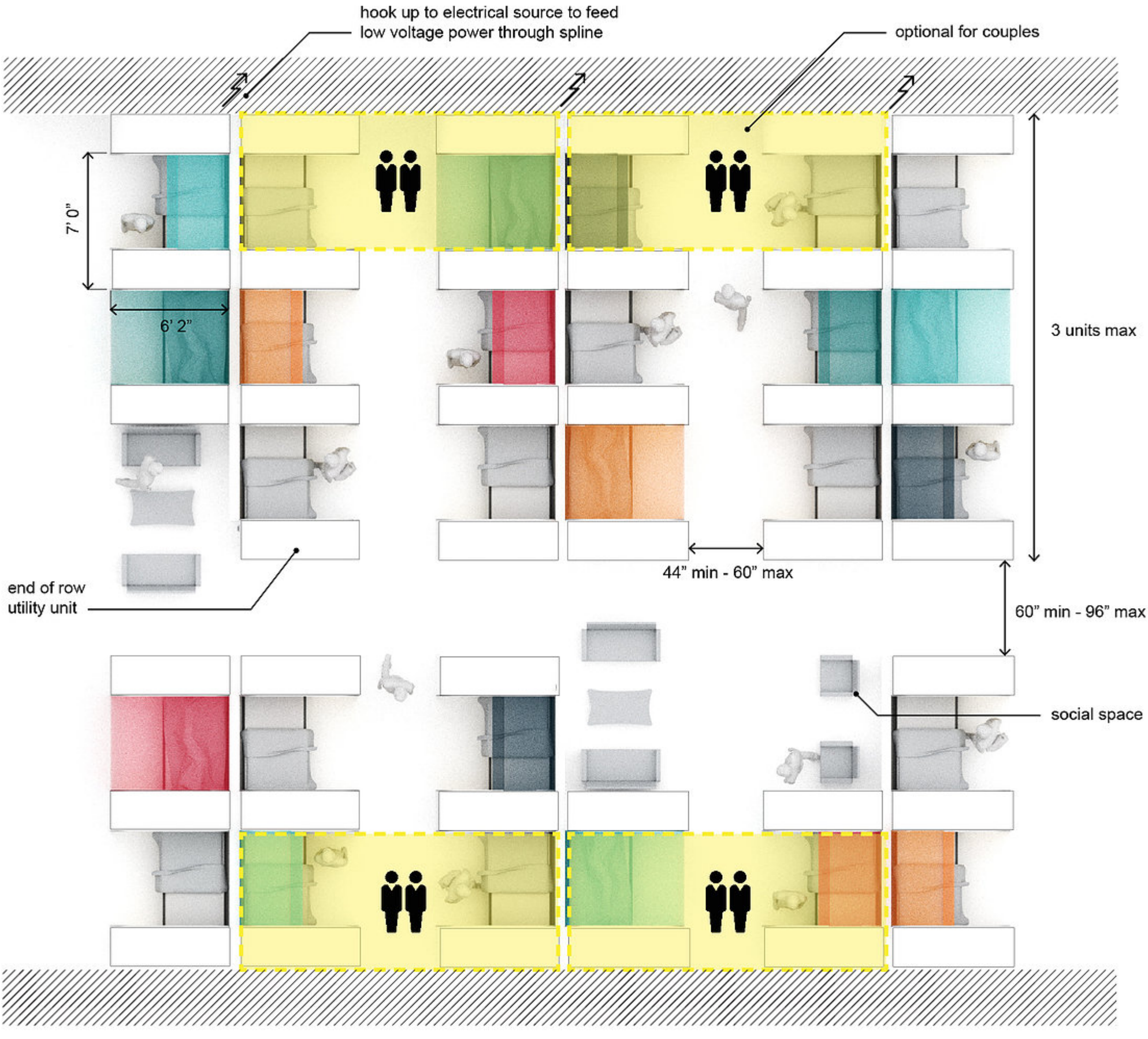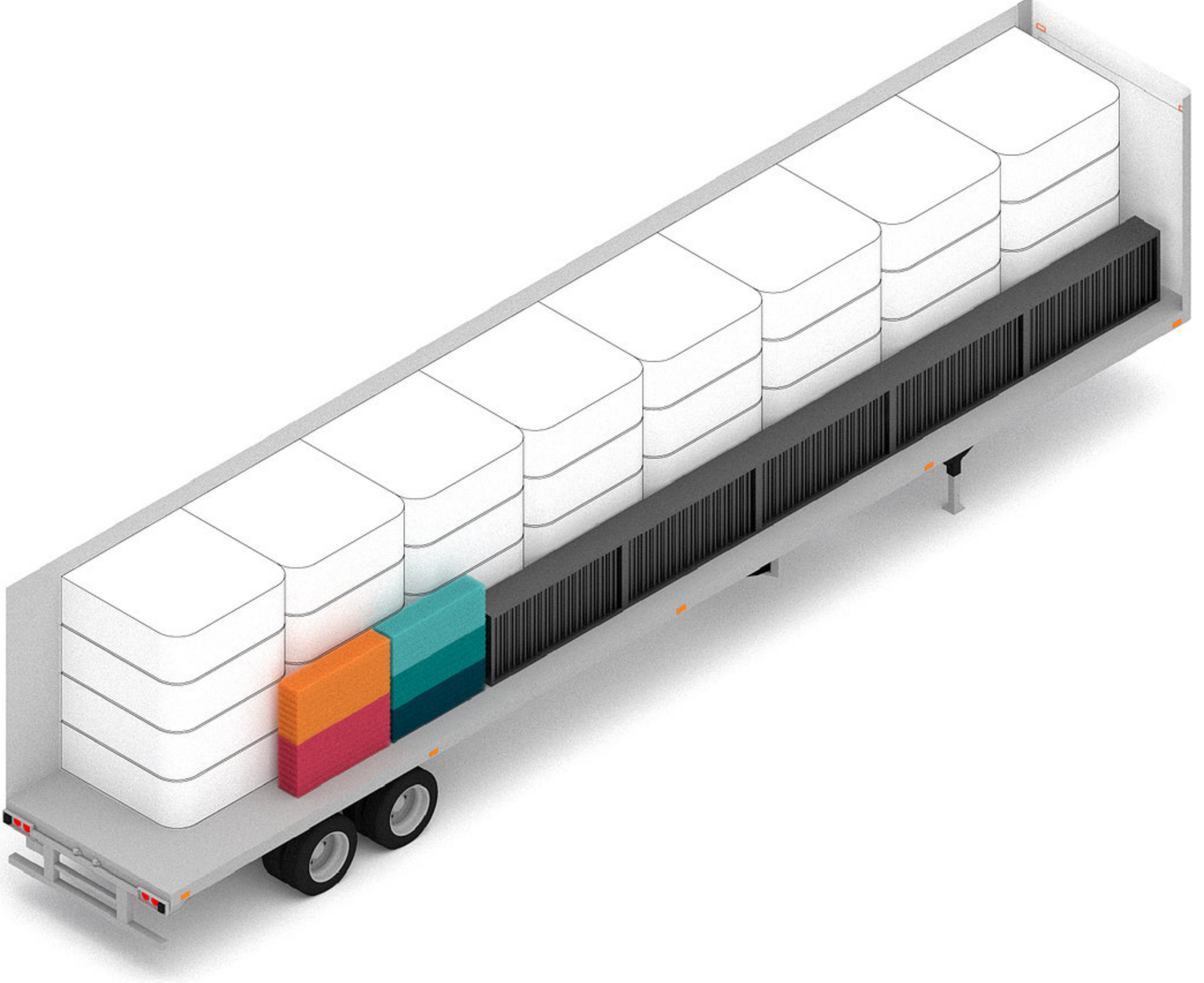
hook up to electrical source to feed
low voltage power through spline
optional for couples
7' 0"
6' 2"
3 units max
44" min - 60" max
end of row
utility unit
60" min - 96" max
social space