REDACTED VERSION

Supplemental Report

To the Comprehensive Reliability Assessment of the

Vermont Yankee Nuclear Facility

Provided by Nuclear Safety Associates

to the

State of Vermont Department of Public Service

April 30, 2010

Index

EXECUTIVE SUMMARY I

INTRODUCTION IV

1.0 VERTICAL ASSESSMENT OF THE ADVANCED OFF-GAS (AOG) SYSTEM 1

1.1 System Description 1

1.2 Criterion 1 - Initial Conditions 3

1.3 Criterion 2 – Procurement 4

1.4 Criterion 3 – Installation 5

1.5 Criterion 4 - Operation 6

1.6 Criterion 5 – Testing 8

1.7 Criterion 6 – Inspection 14

1.8 Criterion 7 – Maintenance 21

1.9 Criterion 8 - Repairs 26

1.10 Criterion 9 – Modifications 31

1.11 Criterion 10 – Redesign 32

1.12 Criterion 11 - Seismic Analysis 33

1.13 Criterion 12 – Training 34

1.14 Criterion 13 - Corrective Action Program 36

1.15 AOG System Summary Conclusions 42

1.16 References 43

2.0 BURIED PIPING AND TANK INSPECTION PROGRAM 47

2.1 Introduction 47

2.2 Nuclear Industry Background 48

2.3 Industry Involvement **50**

2.4 Evaluation Methodology **50**

2.5 Evaluation and Technical Basis **51**

2.6 ENVY BPTIP Structure **51**
2.6.1 Procedures and Oversight 52
2.6.2 Risk Ranking 55
2.6.3 Inspections 60
2.6.4 Fitness-for-service (FFS) 64
2.6.5 Repairs 66
2.6.6 Prevention and Mitigation 67

2.7 Corrective Actions **68**

2.8 BPTIP Summary Conclusions **69**

2.9 References **70**

3.0 APPENDIX 1 ENVY AOG LEAK EVENT JANUARY 2010 ..... **74**

3.1 Background **74**

3.2 Leak Event Description **75**

3.3 Leak Investigation and Management Actions **77**
3.3.1 Sources Investigated by the ENVY Team 77
3.3.2 Leak Investigation Strategy (from CR2010-00069) 81
3.3.3 Strategy Implementation (from CR 2010-00069) 81
3.3.4 Investigation Results 84

3.4 ENVY Leak Detection and Monitoring Methods **85**

3.5 Leak Inspection and Repair **89**
3.5.1 Contractor Oversight of Repair Activities 89
3.5.2 Temporary Design Modifications 91
3.5.3 Engineering Design Work-at-Risk Activities 91
3.5.4 Long Term Repair Plans 92

3.6 Leak Event Corrective Action **92**
3.6.1 Cause Analysis 92
3.6.2 Management of Extent of Condition 93

3.7 Summary Conclusions **94**

3.8 References **95**

4.0 APPENDIX 2: UNDERGROUND PIPING DEFINITION.....96

5.0 APPENDIX 3: RELIABILITY SIGNIFICANCE DEFINITIONS 98

6.0 ACRONYMS.....99

7.0 ATTACHMENTS 103

7.1 Attachment 1: List of Tables 103

7.2 Attachment 2: Table of Figures.....103

Executive Summary

As a result of the recent discovery of tritium in an Entergy Nuclear Vermont Yankee (ENVY) station monitoring well, the State of Vermont has learned that there are underground piping systems at the ENVY plant that carry radionuclides. Subsequently, ENVY disclosed that there were additional piping sections that meet the requirements of Section 3(a)(7) of Act 189. Therefore, to completely fulfill its obligations under Act 189, the Department of Public Service (DPS) initiated an independent vertical assessment of the Advanced Off-Gas (AOG) system[1], which includes underground piping that carries radionuclides.

The Act also called for a horizontal investigation at any point in the vertical inspection at which an emergency-related function, the operability, the design, the performance, or aging issues, or other unanalyzed or nonconforming conditions are encountered. Act 189 states, "….a thorough horizontal or lateral exploration shall be conducted to determine extent-of-condition and root cause with attention to evaluating licensee performance in problem identification and resolution, testing, engineering, in-service inspection, and maintenance." Based on the discovery of tritium in station monitoring wells, the recent underground pipe leak in the Advanced Off- Gas (AOG) System and future potential for leaking underground piping or tanks, the Vermont DPS in consultation with the Public Oversight Panel (POP), determined that a horizontal review of ENVY's Buried Piping and Tanks Inspection Program was also required as part of the supplemental assessment.

Due to the complex nature of the AOG leak event, the supplemental assessment scope was further expanded by the POP and DPS to include assessment of station activities associated with the AOG leak investigation, location and repair.

In summary; the scope of this Supplemental Report (SR) to the Comprehensive Reliability Assessment (CRA) report dated 12/22/2008[2] specifically deals with the AOG system, recent station activities associated with the investigation, location and repair of the current underground AOG leak, and the Buried Pipe and Tank Inspection Program. The findings in this SR are based on the assessment of these three focus areas; therefore, the SR did not undertake to confirm or update the CRA assessment in other areas of performance or to reassess the findings in the CRA report.

[1] This system was chosen in consultation with the Public Oversight Panel.

[2] A less redacted edition of the report was issued on 1/15/09. The same material was in both editions of the CRA but more material was made public in the 1/15/09 edition.

Overall Conclusions

The SR Assessment Team reviewed various managerial and technical areas associated with the scope described above. In many of these areas, ENVY practices meet industry standards and in some cases exceed industry standards. The assessment also identified challenges and watch areas that should be addressed to ensure that ENVY will run reliably for an extended operating period.

Based upon the assessment of the AOG system, BPTIP, and the recent AOG leak investigation, location and repair activities, the SR Assessment Team believes that these specific areas will not prevent ENVY from operating reliably over an extended operating period. The supplemental assessment does not change the overall conclusions provided in the initial CRA report.

The following principal conclusions of the SR are those high level issues that could potentially impact ENVY's ability to achieve and sustain high levels of equipment reliability over an extended operating period. Management action, oversight and follow-through are needed to ensure that these issues are addressed and resolved if ENVY is to maintain high levels of equipment reliability for an extended operating period.

Principal Conclusions

Low Level Repetitive Equipment Issues

Low level repetitive equipment issues on non-safety related systems are not resolved in a timely manner and could challenge future plant reliability. There is a need for more management focus and timely resolution of repetitive low-level equipment issues on non-safety related structures, systems, and components. This was identified in the original CRA as an issue with the Cooling Towers, and it has recently been self-identified during an ENVY Quality Assurance Audit in March 2009 as an area for improvement: "Weaknesses in implementation of some corrective actions have led to untimely or ineffective issue resolution." It was evident again, during this supplemental assessment of the AOG system, that long-standing repetitive issues with AOG components such as: hydrogen analyzers; valve seat issues with AOV-OG-101A; AOG drain tank level control issues; and, steam trap MS-107-1A repairs challenged Operations and could have impacted station reliability.

Underground and Non-readily Accessible Piping

Underground and non-readily accessible piping leaks must be more proactively monitored, detected and managed. Over the past few years, five pipe leak events have occurred on AOG drain lines at ENVY. While none of these were "buried pipes,"[3] they were either in underground piping that is not buried or in non-readily accessible pipes. A few of these required significant investigation and repair activities. The SR Assessment Team concluded that ENVY does not

[3] "Buried pipe" connotes piping directly in contact with soil or concrete.

have an effective program or practices in place for early leak detection and monitoring of underground and non-readily accessible piping. The extent of conditions from the current AOG leak event is unknown and will not be fully understood until after the completion of the Root Cause Analysis[4]. Therefore, underground and other non-readily accessible piping could be a challenge to future plant reliability if they are not proactively monitored, detected, and managed.

[4] A Root Cause Analysis is being prepared by Entergy

Introduction

Purpose, Goals, and Assessment Approach

Entergy Nuclear Vermont Yankee (ENVY) provides about one-third of the energy for the state of Vermont and has applied for a 20-year license extension beyond its original license expiration. The purpose of the 2008 Comprehensive Reliability Assessment in 2008 was to address the State of Vermont Legislative Act 189. The Act called for an independent assessment of the reliability of the systems, structures, and components of the ENVY facility and the management and organizational effectiveness, to examine the comprehensive reliability of the nuclear station and determine if it should be authorized to operate beyond the current license expiration date of March 21, 2012.

In preparing the scope of the Comprehensive Reliability Assessment (CRA), the Public Oversight Panel (POP), the Department of Public Service (DPS), and Nuclear Safety Associates (NSA) assessment team were informed by ENVY that there were no underground piping systems that met the description of Section 3(a)(7) of Act 189; specifically, an assessment of "…an underground piping system that carries radionuclides." As a result, the scope of the initial assessment conducted in 2008 substituted ENVY's Service Water System (SW) which does not carry radionuclides for the underground piping described in Act 189. In addition, a review of ENVY's Buried Pipe and Tank Inspection Program (BPTIP) as it was applied to the SW system was performed.

As a result of the recent discovery of tritium in an Entergy Nuclear Vermont Yankee (ENVY) station monitoring well, the State of Vermont has learned that there are underground piping systems at the ENVY plant that carry radionuclides. Subsequently, ENVY disclosed that there were additional piping sections that meet the requirements of Section 3(a)(7) of Act 189. Therefore, to completely fulfill its obligations under Act 189, the Department of Public Service (DPS), after consultation with the POP, initiated an independent vertical assessment of the Advanced Off-Gas (AOG) system[5], which includes underground piping that carries radionuclides.

This supplemental assessment was conducted to address the 13 specific 'Vertical Slice' criteria described in Act 189 on the AOG system. These criteria are as follows:

1. Initial Conditions - What were the codes and standards with which the system was designed to comply and what was the design basis? Is the design of the system in keeping with the expected initial conditions and its design basis?
2. Procurement - If there were procurement changes, was a new set of review calculations completed for those procurement changes and were those procurement changes compared against the original design and all of its calculations?

[5] This system was chosen in consultation with the Public Oversight Panel.

3. Installation - "as-built." Do plant records adequately represent the "as-built" condition of the plant? Are all changes reflected in all documents from the design basis through as-built and through current operations?
4. Operation - What changes or compensations have been made to accommodate unanticipated operations outcomes? Have those changes, compensations, and accommodations been duly noted in procedural manuals and logs? Have root cause analyses been conducted to reflect unanticipated outcomes? If root cause analyses were not conducted in any particular instance, why not? If root cause analyses were not conducted in any particular instance, have any unanticipated system operations outcomes been duly corrected or compensated in all safety and reliability operations and procedures?
5. Testing - When systems have undergone periodic tests, what have been the results? Are resulting corrective actions reflected in all documents from design through "as-built" through current operations?
6. Inspection - When systems have undergone periodic inspections, have those inspections been successful? Are the resulting changes reflected in all documents from design through "as-built" through current operations?
7. Maintenance - Has the management system for aging components been adequately maintained to assure the components meet the design basis? Is there a track-change system in place to determine what components have been reviewed, repaired, or replaced? Is there an accurate system in place to record when those reviews and repairs were completed? Is there a program of operations or a schedule of operations that specifically delineates what aging management systems, as identified in the industry-wide database, are being reviewed and when. Is adequate time allowed in each outage for aging management review and adequate maintenance? Are the aging factors discovered actually being repaired in a timely manner?
8. Repairs - Have repairs been performed which assure the system will operate as expected? Are all repairs completed as soon as possible? Are repairs sufficiently in-depth to effectively invest in the plant and its operational systems?
9. Modifications - Do all modifications to the system also comply with the system's original design basis? Have all procedure manuals and operations manuals been updated to reflect the impact of any modifications made to any system?
10. Redesign - Have changes made to the plant since its original construction been reviewed to ensure that safety margins have not been reduced? Has each component modified for uprate been reviewed to assure that operational margins have not been reduced and to assure that design basis redundancy has not been compromised? Have any repairs, maintenance, or modifications impacted the original design of the redundant safety systems? Are all systems still "single failure proof"?

11. Seismic Analysis - When was the most recent modern, computer generated, finite element seismic analysis performed on each of the seven vertical slice systems examined in the audit? Does ENVY remain capable of withstanding design basis events beyond the original 40-year design life of the plant to reflect the age-related changes in the plant and weight changes from all modifications during the first 35 years of operation?
12. Training - Has an adequate review and evaluation of operator training and operating procedures been conducted? Has each change been adequately reflected in the operations procedures? Have operations personnel been adequately trained in all modifications to all systems? Are operations personnel frequently updated and trained regarding any troublesome issues other plants have uncovered which may compromise operations and safe shutdown?
13. Corrective action programs - What corrective action programs have been established for each of the systems audited? Have the corrective actions taken been properly integrated in the corrective action program? Have corrective actions been taken in a timely manner? Where recorded items have been deferred, have they been appropriately evaluated for risks and potential consequences of deferral and appropriately tracked while awaiting resolution?

Act 189 also called for a horizontal investigation at any point in the vertical inspection at which an emergency-related function, the operability, the design, the performance, or aging issues, or other unanalyzed or nonconforming conditions are encountered. Act 189 states, "….a thorough horizontal or lateral exploration shall be conducted to determine extent-of-condition and root cause with attention to evaluating licensee performance in problem identification and resolution, testing, engineering, in-service inspection, and maintenance." Based on the discovery of tritium in station monitoring wells, the recent underground pipe leak in the Advanced Off- Gas (AOG) System and future potential for leaking underground piping or tanks, the Vermont DPS in consultation with the Public Oversight Panel (POP), determined that a horizontal review of ENVY's Buried Piping and Tanks Inspection Program was also required as part of the supplemental assessment.

Due to the complex nature of the AOG leak event, the supplemental assessment scope was further expanded by the POP and DPS to include assessment of station activities associated with the AOG leak investigation, location and repair.

In summary; the scope of this Supplemental Report (SR) to the CRA specifically deals with the AOG system, recent station activities associated with the investigation, location and repair of the current underground AOG leak, and the Buried Pipe and Tank Inspection Program. The findings in this SR are based on assessment of these three focus areas; therefore, the SR did not undertake to confirm or update the CRA assessment in other areas of performance or to reassess the findings in the CRA dated 12/22/08[6]. The SR Assessment Team members used a variety of

[6] A less redacted edition of the report was issued on 1/15/09. The same material was in both editions of the CRA but more material was made public in the 1/15/09 edition.

assessment techniques to perform a vertical assessment of the AOG System, evaluate station activities relating to an underground leak, and conduct a horizontal assessment of the Buried Pipe and Tanks Inspection Program (BPTIP), These included:

- Interviews with Corporate and Station personnel.
- Review of selected station procedures and documents.
- Key-word searches of electronic records databases.
- Evaluation of processes and programs associated with the AOG system and BPTIP.
- Review of Performance Indicators and associated analysis details for these areas.
- Review of selected Condition Reports and improvement plans/corrective actions for the AOG system and BPTIP.
- Review of selected station Self-Assessments, Operating Experience, and QA Reports/Surveillances relating to the assessment areas.
- Review of regulatory reports pertaining to performance deficiencies associated with the AOG system or the BPTIP.
- Attendance at various management meetings or presentations.
- Observation of selected work activities.
- Observation and review of station plans and activities to address the underground leaks.
- Performance of an AOG system walk-down of accessible areas.

Any identified performance trends or concerns associated with the AOG system, AOG leak detection and corrective activities, and the BPTIP were identified and evaluated. The intent of these evaluations was to identify potential deficiencies or significant risks or challenges to plant reliability.

Throughout this report, the SR Assessment Team commented on ENVY's levels of performance regarding various managerial and technical areas. Definitions of the terms used by the SR Assessment Team are as follows[7]:

Good Practice: Managerial or technical area that was determined to be consistent with industry good practices that support plant and equipment reliability.

Meets Industry Standards: Managerial or technical area that was determined to be consistent with industry standard practices that support plant and equipment reliability.

Watch Area: Pertains to issues identified for which management is aware; however, without appropriate focus there exists the potential for future effect on plant and/or equipment reliability.

Challenge: Increased management focus or additional corrective actions are recommended. If this does not occur, future plant and/or equipment reliability could be affected.

[7] These terms are the same used in the CRA and are contained in Appendix C of the CRA.

Relative to the use of the terms "underground piping" and "buried piping" in this SR, a standard definition that is recognized across the nuclear industry (NEI, INPO, EPRI, and the NRC) does not exist. Over the past few years, a great deal of effort to develop a common set of definitions has occurred; therefore, there are general industry terms that provide guidance for the definition. To establish clarity of terms referenced in this report, the SR Assessment Team has applied the following definitions for "underground piping" including "buried piping" as a subset of underground piping

Underground Piping Definition

A pipe or any part of a pipe that is below grade level and external to a building, including but not limited to:

- A pipe contained within a trough, tunnel or duct.
- A pipe that is inside of a protective sleeve (such as a pipe within a pipe).
- Buried piping (a subset of underground piping) that includes:
  - A pipe (including any pipe coating) that is either directly in contact with soil or,
  - A pipe directly encased in concrete material and beneath the soil.
    (Note: Pipe coatings are considered part of the pipe)[8]

The buried pipe definition is consistent with the current definition applied by Entergy and ENVY for "buried section" pipe. See Section 4, Appendix 2 of this SR for further details.

[8] This definition of "underground pipe" was arrived at by the DPS and the POP with NSA input into the discussion.

1.0 Vertical Assessment of the Advanced Off-Gas (AOG) System

1.1 System Description

In 1973 Vermont Yankee Nuclear Power Corporation (VYNPC) replaced the existing Off-Gas System with an Advanced Off-Gas (AOG) System. The modification was done to reduce the amount of radioactive gaseous effluents released to the atmosphere at the plant site during normal operation. The AOG System consists of dual path hydrogen dilution and recombiner trains, an initial delay pipe, dual path moisture removal/dryer beds and guard beds, a charcoal absorber system, dual vacuum pumps, a final delay pipe, and an off-gas stack. The AOG System collects, processes, and delivers gases from the main condenser air ejector, the start- up vacuum pumps, and the gland seal condenser to the plant main stack for elevated release to the atmosphere during normal plant operation. It is designed to reduce the air ejector radioactive releases to the atmosphere to levels as low as reasonably achievable. It also reduces the possibility of hydrogen ignition by recombining hydrogen and oxygen under controlled conditions. The major components of the AOG System are shown on the schematic diagram included as Figure 1.

The hydrogen dilution and catalytic recombiner subsystem consists of a single path leading from the steam jet air ejectors to two parallel flow paths for hydrogen recombination. The major components of each recombiner flow path are a pre-heater, a hydrogen-oxygen recombiner, and a de-superheating condenser. Each path provides 100% capacity and is capable of operating independently of the other.

The initial delay pipe is designed to provide an approximate 55 minute retention time. This is based on a design flow rate of 30 Standard Cubic Feet per Minute (SCFM).

The moisture removal and dryer flow path consists of two parallel cooler condenser and gas dryer units. There are two dryers per flow path. The redundancy allows the system to operate with one train in service and the other train in the standby or maintenance mode. The cooling water for the condensers is supplied from the plant condensate system. Each flow path also includes a particulate (HEPA) filter at the exit side of the delay pipe.

The charcoal absorber subsystem consists of seven tanks of charcoal absorbers preceded by a smaller charcoal guard bed upstream in each moisture removal/dryer train. The guard bed protects the seven main charcoal tanks from excessive moisture in the event of a malfunction of the moisture removal system. Only six tanks are required to assure full design performance for full power plant operation while the seventh tank can provide additional delay or batch storage.

Off-gas leaving the charcoal absorbers passes through another particulate (HEPA) filter assembly and then the system pressure is boosted to above atmospheric pressure before entering the final delay pipe and ultimately passing out the stack.

The final delay pipe, located after the charcoal absorbers, provides an approximate 80 minutes of additional retention time at the design flow rate.

The AOG System is fully instrumented and alarmed for remote operation from the control room. Various system parameters such as temperature, pressure, moisture content, and radioactivity levels are normally monitored, allowing for appropriate corrective actions if any parameter is out of tolerance. There are seventeen radiation monitors on the AOG System. Monitors are utilized to provide alarm and/or isolation, and two provide trip functions should radiation levels in the system exceed pre-determined limits.

Much of the AOG piping system is underground. Lines that run between the turbine building and the AOG building are run in a concrete pipe tunnel. The concrete pipe tunnel houses piping from other systems in addition to AOG, such as instrument air and service water lines. This tunnel also carries lines from the AOG building to the AOG drain pit. The floor of the tunnel is sloped to a drain, which is designed to collect any leakage or condensation and direct it to the AOG Drain Pit sump and then to the radwaste building for processing. This tunnel is located approximately 15 feet below grade and is not normally accessible. There is one process line between the AOG building and the radwaste building that is buried and shielded with concrete. Other buried pipes connect the AOG process lines to the delay pipe sections. Building ventilation lines are also buried. The AOG floor drains and equipment drains are routed to the AOG drain pit, which is a concrete vault below grade, next to the AOG building. These drains are buried beneath the AOG building.

MAJOR SYSTEM COMPONENTS

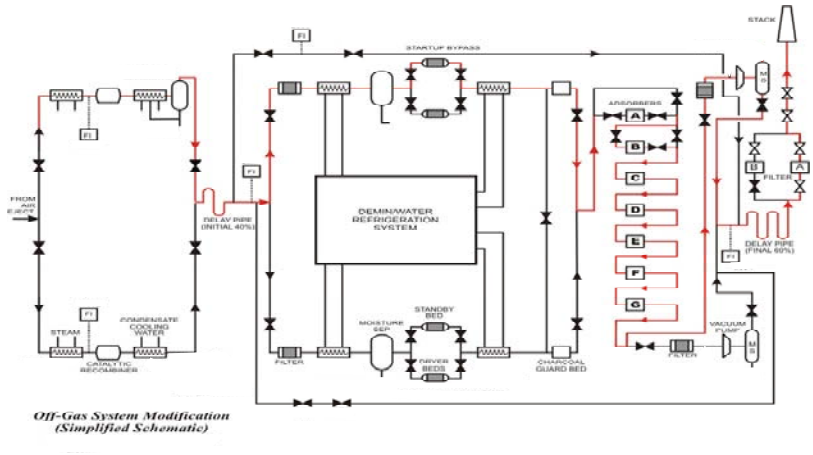

Figure 1: Major System Components

1.2 Criterion 1 - Initial Conditions

ENVY has verified and documented the original design codes and standards as well as the current design bases for the AOG System in the Vermont Yankee Updated Final Safety Analysis Report (UFSAR) Section 9.4, Gaseous Radwaste System, and in various AOG design documents. The AOG System is part of the Gaseous Radwaste System.

These codes and standards include the following:

- ASME B31.1.0, Power Piping Code 1967
- ASME Boiler and Pressure Vessel Code, Section III, Class 3
- ASME Boiler and Pressure Vessel Code, Section VIII, Division 1
- API-650 Welded Steel Tanks For Oil Storage
- AWWA D100 Welded Steel Tanks For Storage Water
- API 620 Design and Construction of Large, Welded, Low Pressure Storage Tanks
- ANSI B96.1 Welded Aluminum-Alloy Storage Tanks

The design bases for the AOG system is also documented in the UFSAR. The design bases consist of system design bases and major component design bases. The system design bases include the following:

- System functions
- Regulatory requirements
- System design requirements
- Operating requirements
- Electrical and instrument and control requirements

Major component design bases are typically performance requirements such as retention times, adsorption rates, etc. These design bases are itemized in the UFSAR. The primary design basis functions for the AOG System are to collect, process, and deliver ejector radioactive gases to the main stack, with release rates to the atmosphere reduced to as low as reasonable achievable levels. Design changes to the AOG are controlled by procedure EN-DC-115, Engineering Change Process. This procedure mandates reviews to ensure compliance with regulatory, code, and industry requirements. It also requires initiation and processing of updates to plant configuration documents and plant operating and design margin documents, and requires that these documents be updated prior to modification closure.

ENVY utilizes a fleet-wide Configuration Management Program, EN-DC-105. The purpose of this procedure is to ensure consistency between the design requirements, physical configuration, and plant configuration information.

Interviews with plant engineers and managers confirmed their knowledge of these procedures, as well as the system design codes and standards and the design basis for the system. Review of selected design documents, including design specifications for the system, has determined that these procedures are effectively implemented and the original design codes, standards, and bases are maintained.

Various NRC inspection reports support the above conclusion. A number of NRC Component Design Basis Inspection (CDBI) Reports concluded that sufficient design controls are in place to assure that components will meet their intended design functions. In addition, various NRC inspection reports were reviewed to determine their applicability to the AOG System. There were no findings of significance regarding the AOG System identified in these inspection reports. Details of the inspections can be found in the applicable inspection reports listed in the Reference Section of this report.

The Extended Power Uprate (EPU) Program included a comprehensive analysis of the effect of Power Uprate on the design and operating basis of the plant systems and components, and evaluated the acceptability of any changes. The analysis looked at margin changes at both the component and system level. It analyzed the EPU impact on margins to assure there were no unacceptable margin reductions. The analysis was reviewed and approved by each affected organization at the site. The analysis is comprehensive, thorough, and consistent with industry standards. The analysis determined that there were no unacceptable impacts on AOG System margins as a result of EPU.

A document search did not reveal any relevant exemptions, deviations, or waivers from the design requirements for the AOG System.

Based on the document reviews and interviews noted above, the design of the AOG System is consistent with its expected initial conditions and current design basis.

1.3 Criterion 2 – Procurement

ENVY procedure EN-DC-115 governing engineering changes, calculations, procurement changes etc., requires that applicable calculations be performed to support engineering changes, that the changes be compared against the original design requirements and design bases, and the changes be verified as-built prior to return to service of the implemented engineering change. ENVY procedure EN-DC-126 for performance of calculations prescribes the requirements and the format for the preparation of the calculations. Discussions with plant engineers and managers confirmed their familiarity with these procedure requirements. Reviews of design documents, including modification packages, determined that these procedures were appropriately used for AOG System changes.

There have been modifications to the AOG System since the 1973 upgrade. Some of those modifications were procurement changes. Two of those procurement changes were reviewed in detail, ER 06-1350, Piping Material Change for AOG Small Bore Piping, and ER 05-0138, AOG Cooler/Condenser Steam Trap High/Low Level Alarm. ER 06-1350 was initiated to replace Flow Accelerated Corrosion (FAC) susceptible carbon steel piping in the AOG System with chrome moly piping. Neither of these modifications required the performance of procurement calculations; however, a review of the modification documents determined that the appropriate equivalency evaluations were performed to assure compliance with the original design bases.

Based on the review of these modification packages and the interviews noted above, the assessment demonstrated procedural compliance; therefore, there is assurance that the applicable calculation procedures were followed and new calculations were performed when necessary. Procurement changes are being performed in accordance with industry standard practices.

1.4 Criterion 3 – Installation

The Engineering Change Process procedure EN-DC-115 sets forth the requirements for updating pertinent engineering, operating, training, maintenance, program, and licensing documentation. The procedure specifies which updates are required prior to return to service, and those to be tracked and completed after return to service but prior to Engineer Change (EC) closure. Interviews with design engineers and managers, as well as the AOG system engineer confirmed their familiarity with these procedure requirements. The procedure specifically requires that plant calculation changes be verified "as-built" prior to returning the system to service. Quality Assurance audits are also used to verify procedure compliance. Reviews of plant records confirmed that these requirements are being implemented in a timely fashion and in accordance with procedures.

Modification package reviews for the AOG System by the SR Assessment Team also verified that system changes are being properly reflected in design documents.

As part of this supplemental assessment, 74 miscellaneous piping drawings that were utilized in January 2010 to generate the buried piping list for the BPTIP were reviewed. These included 12 drawings specifically applicable to the AOG System. Where this review identified buried piping on those drawings including AOG System piping, it was validated that the AOG piping was included in the buried piping list.

It should be noted that the AOG System is considered a Balance of Plant (BOP) system. Consistent with industry practices, the plant records for BOP systems are not subject to the same control mechanisms as those of a safety-related system. A relevant example would be the accuracy of drawings reflecting the location of buried piping. Buried piping was typically installed in accordance with design drawings; however, the precise as-built location of the buried piping may not always be reflected in those drawings. If an obstruction was encountered during installation of the buried piping, the installation drawing may not have been revised to reflect the

rerouted piping. Thus, while the drawings do allow for the identification of buried piping they may not, for a small population of piping, provide for the determination of the precise location of such piping. This is consistent with industry practices for BOP systems and it is most likely representative of the condition of BOP buried piping drawings at ENVY.

Until recently, the BPTIP buried piping list was an uncontrolled document. On February 22, 2010, more stringent set of controls were implemented to apply until the Entergy fleet guidance is formalized. These more stringent controls required that access to the list be controlled by requiring a user ID and password. They also require that the list be write-protected with only the BPTIP owner and his or her immediate supervisor having the ability to make changes. Effective February 22, 2010, revision numbers will be noted on the list. The controls in place are considered acceptable until the fleet standard controls are implemented. Since the buried piping list is a design document for the BPTIP Program, the "as-built" condition of the buried piping in the AOG System should be properly reflected in that list, i.e. all buried AOG piping should be accurately included on the list. The long-term management of the buried piping database is being monitored as part of the overall Buried Piping and Tank Inspection Program implementation.

Based on the document reviews, interviews, and comments noted above, AOG System plant records are being adequately updated to represent the as-built condition of the plant when plant changes take place.

1.5 Criterion 4 - Operation

Unanticipated operation outcomes for this assessment considered plant operating and equipment conditions that did not result in the desired or expected outcome. Interviews with operations personnel were conducted in order to review the procedures and processes used by operations to identify and correct unanticipated operation outcomes. An overview of how the governing procedures and processes are implemented is described in the following paragraphs.

As part of the Condition Report (CR) evaluation process a determination is made whether or not an Operability Determination is required in accordance with EN-OP-104 Operability Determination Process. An Operability Determination is performed in two steps. The first step is performed by operations as an interim evaluation to determine if there is reasonable assurance that a degraded safety-related system or component can perform its intended safety function. The second step is a more comprehensive evaluation performed by engineering that justifies operability for the system or component. In some cases, the Operability Determination specifies compensatory actions that must be completed to ensure operability.

The CR evaluation process would determine whether an Operational Decision Making Instruction (ODMI) is required. An ODMI is a formal process that provides justification for continued operation with a degraded system or component. In some cases, the ODMI specifies compensatory actions that must be completed to continue to operate the system. Compensatory actions that must be completed by Operations on an interim basis can be included in operator

equipment inspection instructions, operator logs, standing orders, turnover sheets, and operating procedures. These compensatory actions are discussed by the operating crew at the beginning of each shift.

One operational event was selected by the SR Assessment Team for a detailed review from a list of AOG system-related Condition Reports (CRs) in the Corrective Action Process (CAP) data base. The selected CR associated with the AOG system was reviewed to ensure appropriate immediate and compensatory operating actions were taken, and that plant procedure deficiencies were addressed as required. Additionally, the event was evaluated to determine if the appropriate level of analysis for the CR was performed in accordance with the CAP.

START CONFIDENTIAL INFORMATION

END CONFIDENTIAL INFORMATION

Based on interviews, review of procedures, review of processes, and review of the response to this specific unanticipated plant event associated with the AOG system, it is concluded that the site's capability to respond to unanticipated operations outcomes meets industry standards.

1.6 Criterion 5 – Testing

To evaluate the Act 189 Criterion called "Testing", the SR Assessment Team compared ENVY standards and practices to industry standards and practices. Samples of documents were reviewed and interviews were conducted relating to the testing associated with the Advanced-Off Gas (AOG) System. The SR Assessment Team reviewed testing performed on the AOG system. This included Predictive Maintenance (PdM) technologies applied, instrument calibration testing, surveillance testing, and other system and equipment testing related to the AOG system. The SR Assessment Team then reviewed selected testing results to determine if testing was being performed as required. The team also reviewed the testing results to determine if the corrective actions taken after the tests were appropriate.

Predictive Maintenance (Component Testing)

The procedures in place for governing the PdM Program are EN-DC-310, Predictive Maintenance Program and AP-0211, Predictive Maintenance Process. The procedure that governs the comprehensive process for individual component health reporting at ENVY is EN-DC-325, Component Performance Monitoring. These procedures are consistent with industry standard practices. Individual equipment condition monitoring testing methods employed on the AOG system are discussed in the following subsections.

Infrared Thermography Testing

Infrared Thermography (IRT) technology is routinely scheduled for the AOG system. IRT technology is applied to the AOG electrical Motor Control Center (MCC) panels semi-annually and to the AOG system steam traps once per refuel cycle. Infrared images are retained and made available for work packages created to repair identified problems. Site electricians perform all IRT data collection inspections on electrical and mechanical equipment, and the PdM Coordinator performs the analysis and reporting. The semi-annual frequency for MCC panel testing is consistent with EPRI Preventive Maintenance (PM) template guidance and industry good practices. A search of the past three years of Condition Reports (CR) for AOG showed at least one instance where thermography testing results were used successfully on AOG electrical panels to prevent a potential failure. This issue was tracked on the System Health Report until it was resolved. IRT testing on the steam traps was initiated after leaks were discovered downstream of steam traps in 2005. The use of IRT testing to find malfunctioning steam traps is recommended by EPRI as an effective part of a FAC Program in EPRI document 1015425. ENVY also performs IRT testing on steam traps in the HPCI and RCIC system, which demonstrates the good use of internal operating experience by the system engineer. A search of the past three years of Condition Reports (CR) and past ten years of Work Orders (WO) for AOG showed several instances where thermography testing results were used to initiate proactive replacements or repairs at early stages of performance degradation. The scope and performance for the IRT testing program on the AOG system components are consistent with industry standard practices. As it pertains to steam traps, IRT testing at ENVY is more comprehensive than industry standard practices.

Vibration Monitoring and Analysis

AOG components do not currently undergo routine vibration testing. The components in AOG are tested on an “as needed” basis to troubleshoot equipment problems or to gather baseline sets of data. This is consistent with industry standard practices for systems such as the AOG system. In the past, vibration analysis was routinely performed on the AOG Exhaust Fans. However, this was discontinued due to safety issues within the belt guard area during data collection. To compensate, an annual Preventive Maintenance (PM) task, 51799700-0, was created to inspect exhaust fans and perform bearing lubrication. This demonstrates a commitment to safety as well

as equipment reliability and is consistent with good industry practices. A search of the past three years of CRs and past ten years of Work Orders (WOs) for AOG revealed no equipment problems due to excessive vibration. The search showed no equipment issues that could have been prevented if more vibration testing had been performed.

Lube Oil Testing and Analysis

Lube Oil testing is routinely used at ENVY to determine and trend the condition of rotating equipment. For small, non-critical components, such as AOG components, lube oil testing would be performed on an "as needed" basis only. This is consistent with industry standard lube oil testing programs. If required, the oil sampling would be performed by mechanical maintenance personnel and sent off-site for analysis. Lube Oil analysis results reports are provided to the PdM Coordinator and the PdM Coordinator provides feedback on any abnormal findings to the appropriate system and component engineers. A search of the past three years of CRs and past ten years of WOs for AOG revealed no equipment issues that could have been prevented if more lube oil testing had been performed. The program is consistent with industry standards.

Surveillance Testing and Instrument Calibration Testing

Surveillance testing is testing that is required by the plant technical specifications. AOG surveillance testing is performed on the hydrogen analyzers and the high hydrogen trip function. The high hydrogen trip function acts to automatically shut down the in-service recombiner if hydrogen concentrations in the AOG system approach flammable limits. Both of these surveillance activities are performed by the Instrumentation and Controls (I&C) Department. The test results are provided to the system engineer immediately if a problem is identified or stored in the computerized maintenance management system if the results are within predetermined acceptable limits. This is consistent with industry standard practices for surveillance testing.

As the instruments are tested, they are calibrated and adjusted to ensure continued reliability until the time of the next surveillance test. This is consistent with industry standards. All records of adjustments required and adjustments made to the instruments are archived and made available to the system engineer for long-term trending and monitoring. The results are compiled in a database that can be easily searched. The following surveillance activities were reviewed by the SR Assessment Team and found to be consistent with industry standards:

- Hydrogen Analyzer Functional Test (PMRQ 50040003-02, VY Operating Procedure 4380).
- High Hydrogen Trip Logic System Function Test (PMRQ 50040003-06, VY Operating Procedure 4380).

The SR Assessment Team reviewed selected testing results to determine if the corrective actions taken after the tests were appropriate. Calibration records for eight selected components were reviewed. These components were found to be consistently reliable with few failures or

adjustments required. A system-wide search of the past three years of CRs and past ten years of WOs for AOG revealed several instances where the calibration technicians had found instruments out of the acceptable tolerance bands during instrument testing and then adjusted the instruments. The acceptance tolerance bands the technicians use are conservative. This allows for adjustments to be made prior to reaching a point where the operation of the instrument would be affected. This approach is consistent with industry practices. The technicians wrote CRs for the out-of-tolerance instruments, as required, to alert the system engineer. The ENVY surveillance and instrument testing results were consistent with industry standards, with the one notable exception of the hydrogen analyzers. Except for the case of the hydrogen analyzers, instrument testing is appropriately identifying equipment anomalies prior to failure. For the hydrogen analyzers, repeated failures have been found, but the station has not been effective at correcting the root cause of these failures. This does not indicate a problem with ENVY's testing methodology, but does illustrate the tolerance for long standing equipment reliability issues which is discussed in more detail in the section titled Criterion 8 - Repairs.

Valve Testing

Valve testing on the components of the AOG system is performed in conjunction with regularly scheduled valve inspections. All valve inspection and testing results are archived in the ENVY computerized maintenance management system for retrieval and analysis by the system engineer, program engineers, or component engineers. Any abnormal results or concerns are immediately communicated to the system engineer, and a condition report is generated. This is consistent with industry standards. Valve testing is coordinated by the PdM Coordinator. The PdM Coordinator also has the role of the valve component engineer. Component engineers are commonly used at the best utilities to act as subject matter experts on one particular type of component. Routine valve testing is performed on certain air operated valves and check valves in the AOG system. The SR Assessment Team reviewed the testing programs to verify the testing programs are consistent with industry standard programs. The SR Assessment Team also reviewed selected test results to determine if the testing was adequately maintaining equipment reliability.

Air Operated Valves (AOV)

Air Operated Valves (AOVs) in the AOG system are included in the ENVY AOV Program. The AOV Program is a program that coordinates the scheduling, testing, and analysis of all AOVs at the plant. The AOVs are divided into different categories that represent their relative importance to nuclear safety and electricity generation. Each category of AOV receives a different set of testing requirements, depending on the level of importance. Fifteen AOVs on the AOG system have been assigned to the 2B category. Category 2B designates that the valve has the potential to affect overall plant reliability or availability and therefore requires a heightened level of performance. Diagnostic tests are performed on these components on a frequency defined by the AOV Program. Results are analyzed and trended by the AOV Component Engineer. Problems or

anomalies found during diagnostic testing would be immediately communicated to the system engineer and a condition report would be written. A search of the past three years of CRs and past ten years of WOs for AOG revealed some cases where the AOV testing had found issues such as brittle diaphragms, faulty solenoid valves, and small leaks in instrument air lines. The technicians corrected these issues prior to returning the valve to service, and then wrote a condition report or documented the problems found in the work order package. In each case, the valve testing found and corrected the problems prior to valve failure. The number of issues found during testing on AOG is consistent with results at other plants and was not found to represent an equipment reliability issue. Air Operated Valve testing is being used appropriately to prevent equipment failures on the AOG system.

The remaining 71 AOVs on the AOG system are Category 3. Category 3 designates that the valves are within the scope of the maintenance rule, but not risk significant and do not have the potential to affect plant reliability or availability. These AOVs receive no routine testing.

Inspections and testing would be performed when requested by the system engineer or when routine inspections reveal the need for additional information. Inspections are discussed in the section titled Criteria 6 – Inspections. The frequency, performance, and results of the AOG AOV testing are consistent with industry standards.

Check Valves

Check valves are included in the Check Valve Inspection Program based on their component criticality, which is discussed in the section titled Criterion 7 - Maintenance. Most of the check valves in the AOG system are non-critical and not routinely tested, and a failure would have no impact on plant reliability. The routine check valve testing includes disassembling and inspecting the valve to determine wear-rates and internal degradation. Internal parts are replaced, if necessary, during the inspection. Results of the inspection and testing are evaluated by the maintenance technician and then stored in the computerized maintenance management system. Any anomalies are reported to engineering, and a condition report is generated. Following the inspection, the valve is tested to ensure that the valve seats properly and will reliably perform its intended function. A search of the past three years of CRs and past ten years of WOs for AOG did not discover any abnormal test results or equipment failures on check valves. The SR Assessment Team reviewed the recent testing results for one selected valve (OG-779):

- OG-779 was installed as a new component in 2004 (RFO 24) under MM203-026. A 4.5 year inspection schedule was established at that time.
- OG-779 was inspected in 2008 (RFO 27) under WO 51643370 with acceptable results.
- OG-779 is scheduled for next inspection in 2013 (RFO 30) PMQR 50042878-01.

Check valve testing is being used appropriately to prevent equipment failures on the AOG system. This testing process and the results are consistent with industry standards.

Cable Testing

Cables serving the AOG system are routed to the AOG building using underground duct banks. Underground duct banks consist of a grouping of conduits, below grade, which are encased in concrete. Cables are then installed in the conduits.

Cables entering the AOG building in underground duct banks consist of the following:

- Two 480 V AC Power Cables which supply power to the two 480 V Motor Control Centers in the AOG building. The Motor Control Centers in the AOG building supply power to the pumps, valves, heaters, etc. which support the AOG and lighting within the building.
- Low voltage instrumentation and control cable routed to the AOG building from the VY Main Control Room.
- Telephone and communication cable serving the AOG building.

There is currently no periodic testing performed on the 480 V power cables or the instrumentation or control cables associated with the AOG system. However, ENVY has committed to develop a periodic test program as part of the License Renewal Application which would test the AOG 480V Power Cables. No periodic testing is planned for the communications cables or the low voltage instrumentation and control cables. This is consistent with industry practices. A review of the past three years of CRs and past ten years of WOs for AOG did not show any indication of reliability problems associated with electrical cables.

Heat Exchanger Testing

AOG recombiner heat exchangers undergo eddy current testing and performance monitoring in PMRQ 50041660-01 as part of the heat exchanger program. The scope of this PM is to clean, inspect, and perform testing on the heat exchanger tubes to ensure their continued reliable service until the time of the next inspection. A review of the past ten years of WOs for AOG revealed one instance where heat exchanger tubes were proactively repaired as a result of heat exchanger testing. The frequency, content, and results of this heat exchanger PM are consistent with industry standards. A review of the past three years of CRs and past ten years of WOs for AOG did not show any indication of reliability problems related to heat exchangers. The review also indicated no anomalies or failures of AOG heat exchangers from the past three years.

Flow Accelerated Corrosion Testing

The AOG System is included in the ENVY Flow Accelerated Corrosion (FAC) testing program. The program is governed by procedure EN-DC-315, Flow Accelerated Corrosion Program, Revision 3. The FAC Program was evaluated in the original Comprehensive Reliability Assessment, Section 2.12. The purpose of the FAC Program is to predict, detect, monitor, and minimize degradation in single and two-phase flow piping to prevent failures while enhancing plant safety and reliability. Lines are ranked on criteria such as: consequence of failure,

susceptibility to FAC, steam quality, operating temperature, flow, material, plant experience, and industry experience. Lines can be excluded from the FAC testing program if they are evaluated to meet the criteria for exclusion. Several AOG process lines and steam trap drain lines are included in the program population, including the lines that have leaked. The FAC Testing program tests a sampling of locations each refueling outage. The program does not require testing of 100% of all susceptible locations each outage. This is consistent with industry standards.

The SR Assessment Team reviewed recent FAC testing results performed on the AOG system. Inspection locations 08-SB25 and 08-SB26 were inspected during RFO-27 in 2008. These two AOG inspection locations were among the population of 49 large bore, 18 small bore, and 10 steam seal header and exhaust system locations that were inspected during RFO-27. Other inspections not related to AOG were also performed as part of the FAC Program. The FAC Testing determined that no components inspected required repair or replacement based on damage caused by FAC. A review of the past three years of CRs and past ten years of WOs for AOG found one instance where Flow Accelerated Corrosion testing results were used to proactively prevent a failure on a condensate drain line. The FAC testing results are consistent with industry standard results.

The review of the available documentation and discussions with the PdM Coordinator, the FAC Program Engineer, and the AOG System Engineer revealed that ENVY is scheduling and performing testing on the AOG System in accordance with ENVY procedures. The types of testing performed and the frequency it is performed on is consistent with technical specifications and industry standards. Test results are well documented and tracked appropriately on System Health Reports by the system engineer. The results of the testing are consistent with results expected from a reliable system, with the exception of the hydrogen analyzers which are discussed in the section titled Criterion 8 - Repairs. ENVY is currently performing the proper amount of testing to help ensure long-term equipment reliability.

1.7 Criterion 6 – Inspection

To evaluate the Act 189 criterion called “Inspections”, the SR Assessment Team compared ENVY standards and practices to industry standards. Inspections on the AOG system include various visual inspections, the System Monitoring Plan, component inspections in the PM Program, System Walk-Downs, and periodic operator rounds. Often, inspections are performed concurrently with tests to minimize equipment out-of-service times. Testing is discussed in detail in the section titled, Criterion 5 – Testing.

<u>Piping Inspection</u>

Accessible pipes are observed for leaks and degradation by operators during operator rounds on each operating shift. Inaccessible buried pipes are inspected in accordance with the Buried Piping Tanks Inspection Program (BPTIP). Refer to Section 2.0 of this SR for details on the

ENVY BPTIP. The external surfaces of inaccessible buried pipes are inspected on an opportunistic basis. An opportunistic inspection means that when an excavation is performed, an evaluation is included to determine if there is an opportunity to perform a pipe inspection. Work packages that will expose underground pipe for inspection have a work step to notify engineering. The purpose of this notification is to trigger an engineering inspection of the pipe. WO 219750 contains an example of this notification from 1/27/10. Recent inspections of inaccessible pipeline 1-CNP-154B-D3 have been conducted by ENVY personnel using remote monitoring vehicles. Guided Wave Inspection, an emerging form of Long-Range Ultrasonic Testing, is currently being evaluated as another potential inspection method for inaccessible pipelines.

The condition of accessible piping in the AOG Building is inspected by the system engineer as part of the regularly scheduled system walk-downs. The specific attributes inspected by the engineer are given in EN-DC-178, System Walk-Downs. System walk-downs are discussed in greater detail below. These walk-down inspections are intended to detect and trend external corrosion and small leaks.

The inside of the AOG pipes often receive an informal, opportunistic inspection when the system is breached for maintenance. This inspection is typically performed by the maintenance technician. One example of this informal inspection occurs during the AOG recombiner heat exchangers periodic inspection in PMRQ 50041660-01. Part of this heat exchanger program inspection includes looking at the condition of the inlet and outlet pipes.

The SR Assessment Team reviewed the past three years of CRs on the AOG system to determine if piping inspections had been performed as required and to determine the results of the inspections. Three pipe leaks on steam trap drain lines were found during the period from 2004 to 2006 and two additional leaks in 2010. None of these leaks were discovered by routine inspections. This is primarily due to the fact that they were in areas that are not easily accessible. The fact that inspections could not detect the degradation in the pipes and could not predict or prevent the leaks points to a weakness in piping inspections and leakage monitoring. Leakage monitoring for AOG is discussed in more detail in Appendix 1 and represents a watch area for ENVY. Inspection results from other portions of the AOG system were reviewed and found to be consistent with industry standards. Except for the steam trap drain lines, the review of piping inspections and piping inspection results show that the AOG piping system is reliable.

Non-Destructive Examination

Non-Destructive Examination (NDE) is an inspection method employed on AOG piping on an "as-needed" basis. For example, in response to a pipe leak, one immediate action is typically to perform Ultrasonic Testing (UT) to characterize the leak and the corrosion mechanism. Other lines with similar characteristics will receive UT to determine the extent of the degradation cause. The SR Assessment Team reviewed past CRs and found one successful example of this

type of inspection on the AOG system. NDE is also routinely performed as part of the FAC Program, which is discussed above in the section titled Testing. AOG lines are sometimes inspected as part of the FAC Program outage inspection plan or in response to operating experience. This is consistent with industry standards for systems such as AOG.

Operator Visual Inspections

Operators tour the AOG building daily to perform visual inspections and monitor various parameters. The parameter monitoring is recorded and archived in the electronic Shift Operations Management System (eSOMS) for later retrieval, trending, and analysis. Operators initiate CRs if any abnormal or questionable circumstances are encountered. The past three years of CRs was reviewed to determine the results of these inspections. The review showed that operators are in fact performing visual inspections on AOG and are documenting the inspections properly and alerting the proper personnel when unexpected results are found. This type of performance monitoring is important to help maintain equipment reliability. In general, the operator visual inspections found the AOG system to be in good materiel condition. The inspections discovered and corrected numerous minor deficiencies. One exception to the system's reliability was the hydrogen analyzers. Operator inspections routinely found the analyzers either degraded or inoperable. This is an example of effective inspections, but points to the station's tolerance of long standing reliability issues on low priority systems. This lack of aggressive corrective action has been designated as a watch area for ENVY and is discussed later in section titled Criterion 8 – Repairs. The inspections and the parameters monitored are consistent with industry standards.

Continuous On-Line Process Parameter Monitoring

The Emergency Response Facility Information System (ERFIS) provides process information such as temperatures, flows, and pressures for the continuous monitoring of system process information. The ERFIS data is currently being transferred to the Plant Information (PI) software system. Operators continually monitor several important system parameters in the main control room. Most abnormal readings are alarmed on the main control room alarm panels and locally at the equipment. Historical trends of these operational parameters are available to the system engineer. Abnormal readings and alarms are reported on a Condition Report. A review of the past three years of CRs indicated that AOG has encountered a number of alarms and abnormal readings. These conditions were minor in nature and did not adversely affect the overall system reliability. They were corrected appropriately by the Maintenance Department using the work management process. Typically, the Fix-It-Now Team was utilized to correct these minor deficiencies. The conditions reported and corrected were consistent with industry standards.

System Monitoring Plan

The SR Assessment Team reviewed the ENVY process for creating the system specific performance monitoring plan. The plan appropriately identifies system failure precursors, equipment failure modes and the most probable potential cause(s) for each failure. The plan contains the recommended monitoring to identify or prevent these failures. The plan contains expected parameter bands and required action levels. The plan was found to be up to date. The System Monitoring Plan was developed consistent with industry standards and ENVY procedure EN-DC-159, System Monitoring Program. The AOG System Engineer has approximately 15 years of experience as a nuclear operator and approximately 8 years experience as a system engineer. The system engineer is knowledgeable on his system and on plant procedures in general. He is performing system monitoring consistent with industry standards. The SR Assessment Team believes that the AOG System Monitoring Plan could be improved if leakage monitoring were added to the current plan. Leakage monitoring is considered to be a watch area for ENVY and is discussed in more detail in Appendix 1. Some leakage monitoring for AOG is being performed during system walk-downs, such as watching for ground depressions. These signs of leakage might gain a greater, more appropriate amount of attention if they were listed and detailed on the AOG System Monitoring Plan.

ENVY performed a self-assessment on System Performance Monitoring on 9/22/2008. The assessment is documented in VTYLO-2008-0079. Several improvement actions and recommendations were identified across all plant systems and a complete review of VTYLO-2008-0079 revealed that all actions and recommendations identified in the assessment for the AOG System have been applied to the current AOG System Monitoring Plan. The AOG system monitoring plan meets industry standards.

System Walk-Down

The SR Assessment Team reviewed the results from a recent system walk-down. The review found that the system engineer is observing the appropriate parameters and correctly documenting the results in accordance with industry standards and ENVY procedure EN-DC-178, Revision 2, System Walk-Downs. The SR Assessment Team accompanied the AOG System Engineer on a system walk-down. The AOG system engineer performed his walk-down consistent with industry standards.

The SR Assessment Team review found that AOG walk-downs are being performed on an appropriate periodicity and that degradation found during walk-downs is being documented in the System Health Report. The review did not indicate that there are any major unaddressed equipment reliability issues on the AOG system. The review of past walk-down results discovered that housekeeping issues had been identified on several occasions. The housekeeping issues are being resolved appropriately.

ENVY performed a self assessment on System Walk-Downs on 11/16/09. The assessment is documented in VTYLO-2008-0159. The assessment identified several improvement actions and recommendations applicable to all plant systems. All the improvement actions and recommendations have been applied to the current AOG System Walk-Down Plan.

System Notebook

The SR Assessment Team reviewed the System Notebook managed by the system engineer. The purpose of the System Notebook per Entergy Engineering Standard EN-MS-S-001-Multi is to provide a summary source of system information used by the system engineer and back-up system engineers as necessary. Another intention of the Notebook is to provide new system engineers with a useful source of information. Review of the AOG System Engineer Notebook by the SR Assessment Team indicated that the System Notebook documents were up-to-date and being updated on a regular basis. This supports the ability of the organization to capture information and knowledge pertaining to the AOG system that could be used to better manage future system reliability. The operating experience collection was excellent and spanned well over a decade. The content of the Notebook was well organized and matched the requirements of the engineering standard and is consistent with industry good practices.

ENVY performed a self-assessment on System Notebooks on 11/16/09. The assessment is documented in VTYLO-2008-0159. The assessment identified several improvement actions and recommendations for all plant systems. Improvement actions and recommendations have been applied to the current AOG System Notebook.

System Health Reporting

The SR Assessment Team reviewed the current and past three years of System Health Reports for the AOG system. The System Health Reports were found to be prepared in accordance with ENVY procedure EN-DC-143, Revision 9, System and Component Health Reports and consistent with industry standards. The eight performance areas that constitute the system health report and their current performance level are shown in Table 1.

Table 1: Performance Areas

Performance Area	**Current AOG System Color**	**Color Value**
Performance Monitoring	Green	0
Maintenance Rule	Yellow	2
Material Condition	Yellow	2

Table 1: Performance Areas (con't)

Performance Area	Current AOG System Color	Color Value
Operations Impact	Yellow	2
Configuration Management	Green	0
Operating Experience	White	1
System Planning & Long Range Vulnerabilities	Green	0
Miscellaneous Activities	Green	0
Overall / Total	Yellow	7

In Table 1 the overall system status is based on the following scoring: 0 to 3 Green (Meets Expectations); 4 to 6 White (Acceptable); 7 -8 Yellow (Needs Improvement); and ≥ 9 Red (Unacceptable).

As depicted in the table, the overall AOG System Health Report (2nd half 2009) is yellow in accordance with the System Health Criteria defined in EN-DC-143. Yellow designates a need for improvement. To determine if this current color characterization was accurate, an independent review of the AOG system health was performed by the SR Assessment Team.

The following sources of information were reviewed for the AOG system:

- List of Condition Reports (conditions adverse to quality) for past three years.
- Maintenance history for past three years.
- Active projects in the Site Integrated Planning Database (SIPD) database.
- Maintenance Rule (a)(1) action plan (VYSE-MRL-2008-013).
- Outage scope from most recently completed outage and the upcoming outage (RFO-28).
- In depth study of AOV-OG-101A seat leakage issue (multiple documents).

It was determined that, as of the end of 2009, yellow (needs improvement) was an accurate representation in accordance with ENVY procedures. Key issues driving AOG yellow are:

- *Maintenance Rule* (a)(1) status – this shows that overall system reliability currently requires action.
- *Material Condition* – The condition of the steam trap drain lines is a cause for concern, and is discussed in the "Long Range Vulnerability" section of the Health Report. Seat leakage past the AOV-OG-101A valve is the primary driver for the yellow designation of this section. Note that this report was issued prior to the January leak event which is discussed in Appendix 1.

- *Operations Impact* – yellow designation due to two operational issues: leaking gauge on MS-107-B and one inoperative valve position indicator.

The use of the color yellow as the designation for "needs improvement" to describe the current system health is consistent with industry standards and EPRI document 1009745, System, Component, and Program Health Reporting Utility Best Practices. AOG System Health reports are provided semi-annually. This is consistent with the graded approach described in INPO AP-913. The content of the AOG system health reports is consistent with industry standards.

The past three years of system health reports was reviewed by the SR Assessment Team. The overall system health color is noted in Table 2.

Table 2: Overall System Health

Period	Overall Color	Main Reason for color
2nd Half 2009	Yellow	Maintenance Rule (a)(1) status due to AOV-OG-101A seat leakage
1st Half 2009	White	Operational improvements completed for AOV-OG-101A issue
2nd Half 2008	Yellow	AOV-OG-101A seat leakage
1st Half 2008	Yellow	Maintenance Rule (a)(1) status due to AOV-OG-101A and AOG Drain Tank level control system issues.
2nd Half 2007	White	Condition of steam trap drain lines and general housekeeping issues.
1st Half 2007	White	Condition of steam trap drain lines and general housekeeping issues.

Table 2 demonstrates tolerance of equipment deficiencies for long periods of time. Equipment reliability issues on steam trap drain piping and the AOV-OG-101A kept the system in a yellow status for multiple cycles. Not adequately addressing these issues in a timely manner has resulted in adverse consequences, such as the January 2010 leak event and repeat recombiner trip events. Although the inspections are being performed and documented appropriately, the issues are not receiving the correct level of priority from station management to prevent failures. The task of prioritizing issues and projects is in the charter of the Unit Reliability Team (URT), governed by ENVY procedure EN-DC-336, Rev. 2. This prioritization process should be evaluated to ensure that non-safety related systems improvements are being appropriately prioritized to most effectively manage long term plant reliability. The slow response time for certain AOG issues is discussed in the section below titled Criterion 8 – Repairs.

Component Monitoring

Component inspections and monitoring are discussed in detail in the section above titled Criterion 5 – Testing. Component health trending is governed by procedure EN-DC-325, Component Performance Monitoring. This is an Entergy fleet standard and is consistent with industry standards. Component engineers periodically create component health reports and identify actions to address deviations from normal conditions. Component monitoring issues are identified in the system health report when necessary. One example in the current system health report is Work Order 165072 which will repair an equipment degradation issue discovered during an infrared thermography testing of an AOG motor control center.

The review of the available documentation and discussions with the PdM Coordinator and AOG System Engineer demonstrated that ENVY is properly performing periodic inspections. Most of the inspections were performed with successful results. Inspections with unsuccessful results were appropriately identified and placed in the Corrective Action Process. Current inspection results indicate that the AOG system health is yellow, designating the need for improvement. Inspections also indicate that several equipment issues must be rectified to improve system health, including steam trap drain piping, AOV-OG-101A seating ability, and general housekeeping. The repair of these issues is discussed below in the section titled Criterion 8 – Repairs. ENVY is performing inspections consistent with industry standards in a manner that should help to ensure long term equipment reliability.

1.8 Criterion 7 – Maintenance

To evaluate the Act 189 criterion called "Maintenance", the Supplemental Report Assessment Team compared ENVY standards and practices to industry standards and practices.

Component Obsolescence

Several programs, processes, and initiatives contribute to ENVY managing assets to ensure reliability. This includes managing aging components and parts obsolescence.

Entergy Nuclear Management Manual EN-PL-170, Nuclear Asset Management Planning describes the process for addressing aging components. This manual references INPO AP-913, which is an industry standard that includes long term asset management recommendations.

Actions to address obsolete parts are described in ENVY procedure EN-DC-320, Identification and Processing of Obsolete Items. These actions include the quarterly review of the industry supported Obsolete Inventory Replacement Database (OIRD). This database lists obsolete parts and possible replacements. An SR Assessment Team review of the OIRD, the Site Integrated

Planning Database (SIPD), and the System Health Report for AOG determined that obsolescence issues are being properly managed for the AOG system. The management of obsolete assets is consistent with industry standards. The AOG components listed in Table 3 are currently identified as obsolete:

Table 3: Obsolete Item/Resolution Project

Obsolete Item	Resolution Project
OG Alarm Card	SIPD #156
Relief Valve PSV-OG-5070	SIPD #210
Hydrogen Analyzer H2A-OG-2912B transmitter	SIPD #429

The SR Assessment Team reviewed the action plan and mitigation strategy that is currently in place for each of the above listed obsolete components. The plans were found to be proactive and consistent with industry standards. The currently installed components are fully operational and reliable. The term obsolete in this context means that replacement parts are no longer available through the normal supply chain for ENVY. By maintaining the OIRD, ENVY is able to find adequate replacement parts well before they challenge equipment reliability in the plant.

Operating Experience

Another industry source for identifying obsolete and aging parts is Operating Experience (OE). Entergy Procedure EN-OE-100, Operating Experience governs the OE Program. OE from the Institute of Nuclear Power Operations (INPO), Nuclear Regulatory Commission (NRC), Owners Groups, and Vendors is evaluated per the actions described in the OE Program procedure. A check of the AOG System Notebook showed that OE is being collected and reviewed by the AOG System Engineer. OE is also an important aspect of system performance monitoring. OE collection and review for the AOG system is consistent with industry standards.

Single Point Vulnerabilities (SPV)

Single Point Vulnerabilities, or Single Point Failure Components, are components whose failure results in a reactor trip, turbine trip, or loss of generation capacity greater than 5% electrical. The process for identifying and mitigating these vulnerabilities is given in EN-DC-175, Single Point Failure Review Process. During the AOG system walk-down, the SR Assessment Team verified that the system engineer was familiar with all the single point failure components and obsolete components. The SR Assessment Team verified that all SPVs and obsolete components identified by the system engineer were in SIPD. Table 4 lists the AOG SPV issues:

Table 4: Table of SPV Issues for AOG

SPV Issue	Resolution Project
Obsolete relief valve PSV-OG-5070	SIPD #210
AOG Drain tank Level Control System	SIPD #248
Control wiring for AOG Panel 9-50	SIPD #249
AOG drain tank vacuum breaker RV-OG-598	SIPD #251

Each issue above has a mitigating strategy and a resolution identified. Each issue is dispositioned appropriately to help ensure long-term, future AOG system reliability. The SPV procedure and the AOG system list of SPVs are consistent with INPO AP-913 and industry standards.

Component Scoping and Criticality Analysis

Component Scoping and Criticality Analysis refers to the industry standard process given in INPO AP-913 to determine the relative maintenance priority of any given piece of equipment. The SR Assessment Team researched a number of components within the AOG system and verified that the industry standard approach to classifying components was used. The SR Assessment Team verified the results of the analyses were documented and maintained consistent with industry standards.

Scoping and criticality analysis is performed using the Entergy fleet's Preventive Maintenance Optimization System (PMOS) database software program. The scoping and criticality analysis is based on the reference document EN-DC-153, Preventive Maintenance Component Classification.

The SR Assessment Team reviewed the following three AOG components: (NOTE: In accordance with EN-DC-153 if a component is classified as non-critical the Duty-Cycle and Service Condition criteria are not required to be analyzed).

AOG Recombiner Receiver REC-100-1A

Criticality	Non-Critical
Duty Cycle	Not Applicable
Service Condition	Not Applicable

AOG Drain Tank TK-104-1A

Criticality	High-Critical
Duty Cycle	High
Service Condition	Severe

AOG Inlet Valve AOV-OG-101A

Criticality	Non-Critical
Duty Cycle	Not Applicable
Service Condition	Not Applicable

These components were scoped appropriately and used the industry standard set of scoping and criticality questions. The ENVY component classifications and storage database are consistent with industry standards.

Maintenance Basis Determination and Management

The SR Assessment Team reviewed the list of Preventative Maintenance (PM) activities identified for components within the AOG system. Preventative Maintenance is the primary means used at ENVY for managing aging components. The SR Assessment Team selected a number of PM tasks and reviewed the specific maintenance basis and the quality of the basis. The SR Assessment Team review determined that the maintenance basis is well documented and consistent with industry standards. The SR Assessment Team interviewed the individuals responsible for maintaining and approving the maintenance basis and found that they were knowledgeable on the ENVY procedures and the industry standards.

The following three AOG components were selected by the SR Assessment Team for review of their Maintenance Basis:

- MS-107-1A AOG Pre-Heater Steam Trap
- GCH-100-1A AOG "A" Chilled Water Skid
- H2-AN-OG-2921A Hydrogen Analyzer

The content of the maintenance basis for these three components captured pertinent industry standard information. Specifically, information such as common failure modes, recommended PM tasks, and the basis for the task frequencies was well documented. The availability of the PM basis is critical to an effective maintenance program.

The maintenance basis information was managed in a database that allowed for periodic reviews and changes to be tracked. The information was found to be developed from the industry standard templates, e.g. Electric Power Research Institute (EPRI) templates, Entergy Fleet

templates and also input from past maintenance histories. The Maintenance Basis has been continually refined using the work management process and PM Feedback process. The SR Assessment Team found several examples of changes that were made to the AOG system maintenance tasks that enhanced equipment reliability, including PM tasks on steam traps to prevent degradation and adjusting the frequency of hydrogen analyzer maintenance to prevent failures. This is evidence of a healthy program which is consistent with industry good practices. It was determined that the processes used at ENVY to manage the PM Bases are consistent with industry good practices as given in INPO AP-913.

Preventative Maintenance (PM) Implementation

For the AOG system, the SR Assessment Team selected a number of PM tasks that were recently scheduled and completed. This review determined that the PMs were:

- Performed on the correct frequency and prior to the expiration date.
- Documented correctly in the Maintenance Management System.
- Documented with the "as-found" and "as-left" condition of the equipment.
- Given the correct Condition Codes.
- Administratively processed correctly, including the post-performance reviews.

The maintenance tasks listed below were reviewed:

- PMRQ Task# 50042830-01 for MS-107-1A AOG Pre-Heater Steam Trap
- PMRQ Task# 50041199-01 for GCH-100-1A AOG "A" Chilled Water Skid
- PMRQ Task# 50040003-03 for H2-AN-OG-2921A Hydrogen Analyzer

The items checked were performed prior to their expiration date. There is a Performance Indicator (PI) for the maintenance department that monitors how many PM tasks are performed prior to their expiration date. That number is monitored closely, because it is can be a precursor to equipment reliability problems. The current value of the PI for AOG is zero (0), meaning there are no PMs overdue for the AOG system. This PI is one of the 19 contributing indicators to the overall plant Equipment Reliability Index.

The Maintenance Feedback process was verified for each listed PM. The computerized maintenance management system Indus Asset Suite (PassPort) provides for the review of all hard copy results for hand written notes as every work order is scanned and added as an attachment. Written notes were available and reviewed for the selected components. The process successfully records the maintenance reviews, repairs, and replacements for AOG components, and provides the completion dates. The ENVY Maintenance Feedback process is consistent with industry good practices.

In conclusion, the review of documentation relating to managing aging components on the AOG system, including discussions with the Equipment Reliability (ER) Coordinator and the System

Engineer, revealed that ENVY has an effective process in place to properly manage aging components and parts obsolescence on the AOG System equipment. The ENVY process for managing aging components and parts obsolescence meets industry standards.

The review of documentation relating to the specific PMs and the Maintenance Feedback process on the selected AOG System assets, including discussions with the PM Coordinators, indicates that ENVY is properly performing PMs and documenting feedback regarding maintenance findings on the AOG System equipment. There are no overdue PMs at the present time and the total number of corrective maintenance tasks in the maintenance backlog is minimal (current station performance indicator is green for the station) which is consistent with industry good practices. The PM Program and Maintenance Feedback process meet industry good practices. The system wide reviews performed by the SR Assessment Team made it evident that ENVY faces several equipment related challenges on the AOG system. However, ENVY is currently performing planned and preventative maintenance activities in a way that should help to contribute to long term equipment and plant reliability.

1.9 Criterion 8 - Repairs

To evaluate the Act 189 Criterion called "Repairs", the SR Assessment Team compared ENVY standards and practices to industry standards. Repairs at ENVY are prioritized and scheduled per the Work Management Process. This includes work while the unit is on-line and during outages. Numerous procedures govern the work management process. The original CRA determined that all areas needed for typical industry work management programs were addressed. Review of ENVY Work Management Process was performed as part of the original CRA and the conclusions are included in section 1.3.4 of that report.

Repairs

The SR Assessment Team reviewed a list of condition reports written for the AOG system from the past ten years. The review determined that the corrective action process is effective in implementing timely repairs and maintaining equipment reliability for the majority of the cases. The review determined that once repairs are performed, they effectively ensure that the system operates as expected. Most repairs are completed as soon as possible. The review found that the repair method chosen was well-evaluated and performed with long term equipment reliability as the primary goal.

However, some exceptions to the general observations above were noted and are discussed below:

- Hydrogen analyzers (discussed in section 1.14) were found to represent a significant challenge to operators and I&C technicians. A high number of equipment failures were noted by the SR Assessment Team and no effective solution has been implemented. The hydrogen analyzers are required to be operable by plant technical specifications. Failure of the analyzer places the plant in a Limiting Condition for Operation (LCO) per plant technical specifications and places a burden on the Maintenance Department to expeditiously repair the analyzer. The level of reliability of the ENVY hydrogen analyzers is not consistent with industry standards. The inability to promptly repair this issue is not consistent with typical industry practices.
- An AOG steam trap (discussed in section 1.14) that stuck closed repeatedly was tolerated by plant operations and management instead of being promptly repaired. Although the trap was eventually repaired, the plant response was slow. The station's willingness to employ operator workarounds in lieu of effective repair is inconsistent with industry practices.
- The AOG recombiner inlet valve AOV-OG-101A (discussed below) has been responsible for repeated recombiner trips even though the repair is required by the NRC Maintenance Rule. The repeat failures have resulted in an (a)(1) Maintenance Rule status for the AOG system twice in the past 36 months. Maintenance Rule (a)(1) status means that the system is not meeting it's established performance criteria. Lost parts have resulted in delays in the repair. Even though this issue has impacted plant operation, has resulted in a yellow system health color, and has placed the system in an (a)(1) Maintenance Rule status, the issue has not received enough management attention to be given a high priority. This is not consistent with industry practices.
- Steam trap drain lines (discussed below) were found to have repeated failures, even though the action plan to prevent the failures had been identified by the system engineer. Station management failed to properly prioritize the piping replacements which had been identified by engineering. As a result, costly failures have occurred.

Each of these issues was reviewed by the SR Assessment Team. Each issue had an action plan. However, the action plan was not implemented aggressively enough to prevent equipment failures. For the AOG system, the slow response resulted in a system health color of yellow, designating the need for improvement. Normally, factors such as yellow or red system health color, unplanned LCO entries, challenges to generation, and operator workarounds accelerate low priority system action plans.

During interviews, the system engineer was found to be familiar with and active in the resolution of system issues. This type of system ownership is critical in driving resolution on AOG issues.

START CONFIDENTIAL INFORMATION

END CONFIDENTIAL INFORMATION

However, the SR Assessment Team noted that AOV-OG-101A has been unsuccessfully scheduled for repair several times in the last few years. In one case, the repair parts were inadvertently disposed of, so they could not be used for repair or as a model for machining or designing new seats. As a result, the repair had to be rescheduled from RFO-27 to RFO-28. For RFO-28, it was determined that a replacement seat could not be found. Therefore, no repair can be performed in RFO-28. These repeated changes and delays point to a lack of management focus on this long standing issue.

Steam Trap Drain Lines and Leakage History

Small leaks downstream of steam traps, elbows, and orifice fittings occasionally occur at power plants; however, repeat failures can point to problems in equipment reliability processes. The poor condition of the steam trap drain lines is discussed in detail in the AOG System Health Reports. A review of all leaks from the AOG system from 2000 to 2010 was performed by

reviewing the corrective action databases. Five leaks on AOG pipes were noted and researched. The last two leaks are the subject of a currently ongoing, extensive effort. The details surrounding these two leaks are discussed in Appendix 1. These last two leaks are in underground piping. Table 5 below lists the dates and locations of the five leaks.

START CONFIDENTIAL INFORMATION

END CONFIDENTIAL INFORMATION

The corrective action plan to address pipe leaks on AOG drain lines was identified and in progress. The steps of the plan were well thought out and consistent with industry standards. A more aggressive schedule might have prevented the current leak, which is discussed in more detail in Appendix 1. The slow, protracted schedule demonstrates a willingness to assign a low priority to non-safety issues. This extended duration until repair can have adverse consequences, as shown by the costly impact of the leaks discussed in Appendix 1.

Long-Term Asset Management

The SR Assessment Team selected one issue that will require a modification or capital funding for resolution. The issue was investigated to determine how it was prioritized by the Unit Reliability Team (URT).

Twelve CRs have been written against the AOG System Drain Tank Level Control System for both Hi & Lo level alarms over the past three years. The AOG Drain Tank Level Control System is being modified via Site Integrated Planning Database (SIPD) #248 and Engineering Change Request (ECR) 6855, which will add redundancy to the AOG Drain Tank Level Control System and also match Level Control Valves (LCV) to their controllers. The ECR has been approved by the Modification/Project Review Committee (MPRC) and given a M7 priority (medium priority that involves a condition or lack of component spare that has a medium potential of affecting future plant operation within the next 5 years) in accordance with EN-DC-112. Also, the Drain Tank Level Control system issue has been well documented within the system health reports over the past 3 years. This issue has also been identified as a Single Point Vulnerability (SPV) to the AOG system. From the review of this issue, and an interview with the ENVY Equipment Reliability Coordinator, the SR Assessment Team points to this as a good example of appropriately prioritizing long term issues through the URT.

The review of documentation relating to repairs on the selected AOG System assets and discussions with the system engineer indicates that the identification of needed repairs and the evaluations performed to determine the reason for the needed repairs is effective. In many cases, the repairs performed were timely and effective; however, there were a number of notable exceptions found by the SR Assessment Team. Some long standing equipment problems were not addressed in a timely or effective manner on the AOG system. Factors that normally accelerate low priority action plans such as yellow or red system health color, unplanned LCO entries, challenges to generation, and operator workarounds were not effectively incorporated into the repair prioritization process. Examples were noted on the hydrogen analyzers, recombiner inlet valve AOV-OG-101A, steam trap MS-107-1A, and leaks from steam trap drain lines. This slow reaction time when reacting to AOG issues could present future system reliability concerns and is considered a watch area.

1.10 Criterion 9 – Modifications

All design changes are controlled by procedure EN-DC-115, Engineering Change Process. This procedure mandates reviews to ensure compliance with regulatory, code, and industry requirements. It also specifies which document updates are required prior to return to service, and which may be tracked and completed after return to service but prior to EC closure.

Interviews with the design engineers and managers as well as with the system engineer confirmed their knowledge of this procedure and the system design codes, standards, and design bases for the system. Review of selected design documents, including design specifications and modification packages, has determined that this procedure is being effectively implemented and the original design requirements and bases are being adequately maintained.

Various NRC inspection reports, such as those referenced in the original CRA report, have confirmed this conclusion. A number of NRC CDBI Reports, while not specific to the AOG System, concluded that sufficient design controls are in place to assure the components will meet their original design bases. The details can be found in NRC CDBI Report 05000271/2008008, dated September 26, 2008.

The Extended Power Uprate (EPU) Program included a comprehensive analysis of the effect of EPU on the design and operating basis of the plant systems and components, and evaluated the acceptability of any changes. The review looked at margin changes at both the component and system level. The review analyzed the EPU impact on margins to ensure there were no unacceptable reductions. The analysis was reviewed and approved by each affected organization at the site. The analysis was comprehensive, thorough, and consistent with industry standards. The analysis determined that there was no unacceptable impact on the AOG System as a result of EPU.

There have been modifications to the AOG System since the 1973 upgrade. A review of two of those modifications, Modification ER 06-1350, Piping Material Change for AOG Small Bore Piping, and ER 05-0138, AOG Cooler/Condenser Steam Trap High/Low Level Alarm, verified that the design was compared against the original design bases and that the original bases have been maintained. ER 06-1350 was initiated to replace Flow Accelerated Corrosion (FAC) susceptible carbon steel piping in the AOG System with chrome moly piping.

The temporary modification for the AOG excavation, EC-20014, was also reviewed and found to be in compliance with EN-DC-115. Two issues identified in the 2008 Assessment, contractor oversight and work at risk, were also reviewed as part of this current assessment. No problems were identified in either of these areas. Details can be found in Appendix 1 to this report.

Based on the document reviews and interview noted above, modifications to the AOG System comply with the system's original design bases.

1.11 Criterion 10 – Redesign

As mentioned previously in this Supplemental Report the AOG System was completely redesigned in 1973. The redesign was performed to improve system performance and reliability, and to significantly reduce the amount of radioactive gaseous effluents released to the atmosphere during normal plant operation. A review of design documents generated for the redesign verified that appropriate consideration was given to the original design bases, that the original design bases were maintained, and that the modification was done in accordance with the original codes and standards. The AOG System is not a safety-related system and is not required to be single failure proof.

Engineering Change Process EN-DC-115 requires review of all safety significant analysis prior to the closure of any plant modification to ensure that any changes to operating and design margins are properly evaluated. Engineering Margin Management Procedure EN-DC-195 also

requires that maintenance of design and operating margins be considered in engineering changes. Discussions with plant design engineers and managers, as well as the AOG system engineer, confirmed their familiarity with these procedure requirements. Review of plant records, including design specifications for the redesign, confirmed that these requirements are being implemented in a timely fashion and in accordance with procedures. Review of modification packages for the AOG System also confirmed implementation of these requirements.

ENVY has instituted a formal program to track and disposition any potential changes to design and operating margins. The program assigns responsibilities and due dates, and is reviewed on a periodic basis at engineering management meetings.

The EPU Program included a comprehensive analysis of the effect of EPU on the design and operating basis of the plant system and components and evaluated the acceptability of any changes. The review looked at margin changes at both the component and system level. The review analyzed the EPU impact on margins to ensure there were no unacceptable reductions. The analysis was reviewed and approved by each affected organization at the site. The analysis is comprehensive, thorough, and consistent with industry standards. The analysis determined that there was no unacceptable impact on the AOG System as a result of EPU.

The NRC conducted a comprehensive inspection of the EPU Program and determined that sufficient design controls had been implemented for design and engineering work associated with the EPU application. Details can be found in NRC Inspection Report 05000271/2004008, dated December 2, 2004.

A review of the two AOG modification packages previously noted, verified that design and operating margins were considered and were not reduced as a result of the modifications.

Based on the document reviews and interviews noted above, changes made to the AOG System since its original construction have been reviewed to ensure that design and operating margins have not been unacceptably reduced. There were no AOG System components required to be modified for EPU. The AOG System is not required to be single failure proof. The practices at ENVY pertaining to redesign applied to the AOG System meet industry standards.

1.12 Criterion 11 - Seismic Analysis

The seismic design basis for the plant is documented in the “Topical Design Basis Document for External Events”, Revision 2, dated 8/15/05. This basis derives from Draft Atomic Energy Commission (AEC) Criterion 2, Performance standards. The seismic design criteria are based on ground horizontal acceleration of 0.07g for an Operating Basis Earthquake (OBE) and 0.14g for a Safe Shutdown Earthquake (SSE). The vertical acceleration assumed is equal to 2/3 of the horizontal ground acceleration.

The agreement with the Vermont Department of Public Service on the scope of work for this assessment states the following regarding seismic analysis:

“This audit includes the investigation and assessment of ENVY's seismic analysis program. The following scope fulfills the intended requirements of the seismic analysis investigation and assessment.

- Review ENVY's seismic analysis program to determine the approach to seismic design requirements.
- Review the modification process to determine how seismic design considerations are addressed.
- Review selected modification packages to determine if appropriate consideration was given to seismic analysis requirements.

The Supplemental Report assessment team selected modifications for review and verified that seismic analysis screening criteria were properly applied, and that seismic calculations were performed as required. The Supplemental Report assessment team also reviewed DBDs and Updated Final Safety Analysis Report (UFSAR) to identify system seismic design basis and to verify its maintenance in the modification reviews noted above.”

The current design of the AOG System is consistent with its NRC approved Seismic Class II design basis for OBE. All design changes are being controlled by procedure EN-DC-115, Engineering Change Process. This procedure mandates reviews to ensure compliance with regulatory, code, and industry requirements, including seismic requirements.

Interviews with plant design engineers and managers, as well as the AOG system engineer, confirmed their knowledge of these procedures as well as the system design codes and standards and the original seismic design basis for the system. Review of selected design documents, including design specifications and modification packages, has determined that: these procedures are being effectively implemented; the seismic design bases are appropriately factored into the design; and, the seismic design basis has been adequately maintained. As part of the SR Assessment Team review of the 1973 modification of the AOG System, it was noted that finite element analysis computer programs were utilized to perform seismic analysis for the AOG System.

Therefore, based on this review, the current design of the AOG System is consistent with its NRC approved seismic design basis.

1.13 Criterion 12 – Training

This evaluation of operator training as it relates to the AOG system was performed by conducting interviews with training personnel, and by reviewing training processes, governing procedures and training materials.

The training organization has a process for evaluating plant modifications to determine whether there is an impact to training. The Training Department is notified of Engineering Requests (ERs) that are potentially related to training and these are entered into the Modification Training

Matrix. The matrix is routinely evaluated by members of training department management to determine whether the plant changes (ERs) require new training material to be generated, existing training materials to be changed, or whether changes to the simulator are required. If the evaluation determines any of these may be required, a Training Evaluation/Action Request (TEAR) is initiated. The TEAR assigns actions to the training personnel to evaluate specific training materials to determine whether the materials require revision. Actions may also be assigned to develop training materials and to conduct training as required. The ER is also reviewed to determine if any changes to the simulator are required. If a simulator change is required a Discrepancy Report (DR) is generated to implement necessary changes. All actions generated by TEARs and DRs are tracked to completion.

The ENVY Training Department processes include the expectation that appropriate Operating Experience (OE) is to be included in the development and revision of training materials. Entergy Operating Experience procedure (EN-OE-100) delineates the requirements for OE use at the site. The site OE Coordinator, who is responsible for the overall program, ensures all incoming industry and site OE is properly screened and pertinent OE is sent to the appropriate department for further evaluation. The Systematic Approach to Training Process procedure (EN-TQ-201) reinforces the need to consider using OE to re-enforce learning objectives. The training department process evaluates whether OE is relevant to the ENVY training programs and whether it should be incorporated into related Instructor Guides (IG) for classroom and/or simulator training. An instructor's classroom and simulator preparation includes review of relevant OE and the updating of training materials, if necessary, prior to conducting training.

A list of modifications that have been implemented to the AOG system was reviewed. From this list, modification ER 2005-0138 AOG Cooler/Condenser Steam Trap High/Low Level Alarm was selected by the SR Assessment Team for a detailed assessment as it relates to operator training. This plant modification was implemented to remove from service two level switches that activated AOG "A" and "B" Moisture Separator Steam Trap High and Low Level Alarms, which had become a nuisance alarm for the main control room operators. The alarms were originally designed to notify the operators of a steam trap malfunction. The level switches were retired in place and the associated high/low level annunciators were removed from the main control room alarm panel. These switches provided an alarm function only and did not provide for automatic operation of the traps. It should be noted that the modification design took into consideration that there are alternate means to provide indication of a steam trap malfunction.

ER 2005-0138 was entered into the Modification Training Matrix as part of the engineering plant modification process. It was determined by the Training Department that there were potential training implications and, as a result, TEAR VY 2005-655 was initiated. The TEAR evaluation resulted in a training needs analysis. The analysis determined that changes were required to Licensed Operator Training and Auxiliary Operator Training. Additionally, Discrepancy Report (DR) 05-0229 was initiated to review the plant change for any required changes to the simulator.

As a result of the TEAR assessment the following training materials were created to incorporate information concerning the AOG plant modification: 1) Licensed Operator Requalification LOR-25-205; and, 2) Auxiliary Operator Requalification AOR-25-205. It has been verified that the above document changes and the implementation of the required training were completed as of 3/7/06. Instructor guide LOT-00-271 Advanced Off-Gas required a change to a transparency which was completed by 1/28/06. Also as a result of the modification there were operating procedures that required revision. Operating procedures ARS 21018, Alarm Response Sheets, and OP 4321, Instrument Valve Tagging and Control, were revised prior to the closeout of the modification.

OE is routinely included in operator training. OE references have been included in Licensed Operator Training Instructor Guide LOT-00-271, Advanced Off-Gas. Specifically CR-VTY-2007-0264, which evaluated an AOG recombiner isolation event, was included as OE in the most recent requalification training cycle. The inclusion of OE into operator training is used to reinforce learning objectives and to share industry lessons learned.

Discrepancy Report DR 05-0229 was initiated by the Training Department to review the AOG modification documents, and to decide whether any changes were required to the simulator as a result of the modification. It was determined that the AOG Cooler/Condenser Steam Trap Hi/Lo Level alarms needed to be removed from the simulator annunciator panels. The simulator fidelity review, incorporation of the appropriate changes to the simulator, and acceptance testing were verified to be complete by review of DR 05-0229 which was closed as of 9/8/06.

Operations Training performance with respect to the review and implementation of modification ER 2005-0138, AOG Cooler/Condenser Steam Trap High/Low Level Alarm, meets industry standards. As a result of review of the process and interviews with Training Department personnel, and the review of the actions taken in response to this particular modification, it was concluded that the Training Department meets industry standards with respect to evaluating modifications and taking the appropriate actions to incorporate the required changes into the training materials and operating procedures.

1.14 Criterion 13 - Corrective Action Program

An overall assessment of the Corrective Action Program (CAP) and its effectiveness was completed by the NSA assessment team in 2008, and is documented in Section 1.2.5 of the CRA report. This supplemental assessment report vertical slice assessment for the Advanced Off-Gas System (AOG) reviewed changes to the corrective action program that have occurred since the CRA was completed, and then focused on specific Condition Reports (CR) related to the AOG system.

The methodology for this assessment included personnel interviews, review of selected documents and observation of corrective action processes, including:

- Review of applicable procedures.

- Review of appropriate documents and drawings.
- Interviews with personnel.
- Attended a presentation on the AOG system given by the System Engineer.
- Multiple, independent "key-word" searches of the Paperless Condition Reporting System (PCRS) electronic records management system database to identify CRs related to AOG issues.
- Review of 10-years of selected Condition Reports (CRs) associated with AOG.
- Review of CRs closed to Work Orders (WOs) for independent verification.
- Review of NRC inspection reports.
- Review of independent QA reports.
- Review of applicable Self-Assessments.
- Review of selected Operating Experience (OE) reports.
- Observation of a Condition Review Group (CRG) meeting and CR screening process on 2/1/2010.

Corrective Action Program Update

The corrective action program is controlled by procedure EN-LI-102, Corrective Action Process, Revision 14, with an effective date of 12/15/09. Revision 13 was in use during the CRA. The SR Assessment Team review of Revision 14 determined that changes to the procedure were enhancements to the process, and did not constitute a complete re-write or change of intent for the corrective action process. Interviews with personnel selected by the SR Assessment Team from the Corrective Action and Assessment (CA&A) staff and Departmental Performance Improvement Coordinators (DPICs) from the Engineering and Maintenance Groups, determined that current roles and responsibilities are similar to their roles and responsibilities in revision 13 of the procedure. Observation of the CRG meeting on 2/1/2010 further confirmed that the current process remains consistent with that in place during performance of the CRA.

The procedure review also identified that Revision 14 still allows the closure of CRs to a WO, even if the WO is open and the required corrective action has not been completed. Station personnel stated that this is a fleet-wide practice, consistent with the referenced procedure. The linkage of a CR to a WO makes the process more complex and leaves room for the potential failure to complete a corrective action, and is not consistent with industry good practice.

The issue concerning closure of CRs to WOs was identified in the 2008 CRA. Subsequently, a 'Vermont Yankee Nuclear Station Reliability Assessment Report Action Plan' was developed to address performance in 32 areas. Step 13e of the action plan states, "Evaluate whether a CR

should be closed against a Work Order (WO) - even if the WO is open and the required corrective action has not been completed." ENVY has stated that this is an Entergy standard and does not plan to change its existing process. This practice will continue to be monitored by VT DPS in the future.

Corrective Action Program Effectiveness Update

START CONFIDENTIAL INFORMATION

END CONFIDENTIAL INFORMATION

To independently assess CAP timeliness and effectiveness for CRs specifically associated with the AOG system, the SR Assessment Team selected and reviewed CRs associated with AOG that were identified via a key-word search of the CR database. The time period of 10-years for these CRs was from 2000 through 2009. After review of these CRs it was determined that none of the CAs associated with these CRs was late or overdue.

START CONFIDENTIAL INFORMATION

END CONFIDENTIAL INFORMATION

> This AOG level control issue serves as a good example of how escalation of a problem for increased management focus and the development of effective corrective actions can lead to resolution of long standing equipment problems, or other problem situations.

The SR Assessment Team also selected 25 AOG CRs directly linked to WOs for a more detailed review. The review of these CRs determined that they were properly linked to a WO and that corrective action had already been taken, or were planned and scheduled for future action, or assigned to another WO as allowed by procedure.

The SR Assessment Team also reviewed two NRC Problem Identification and Resolution (PI&R) inspections, dated 12/19/2007 and 6/3/2009. Both inspection reports concluded that Entergy/ENVY "…was generally effective in identifying, evaluating, and resolving problems." The NRC report further concluded that station personnel identified problems at a low threshold and entered them into the Corrective Action System; those issues were screened appropriately for operability and reportability; and, ENVY prioritized issues commensurate with the safety significance of the problems. There were no AOG related issues in either of these PI&R inspection reports.

Corrective Action Program Conclusions

The Corrective Action Program is controlled by a well documented process. SR Assessment Team review of the current process determined that the process used during this supplemental assessment is similar to the process in place during the 2008 Comprehensive Reliability Assessment. The procedure and process are consistent with industry standards.

The SR Assessment Team review of the CR database determined that conditions adverse to quality are being appropriately identified and evaluated. Corrective action plans are being developed appropriately. However, examples of untimely or ineffective problem resolution were found, as evidenced by the AOG system steam trap and hydrogen analyzer issues. These issues, and others identified in the section above titled Criterion 8 – Repairs, demonstrate the station's tolerance of long standing equipment reliability issues. This is considered to be a watch area for ENVY, and was previously identified in the original CRA. Some administrative errors have also occurred. These issues have been self-identified by ENVY personnel and appropriate corrective actions were implemented.

One SR Assessment Team area of concern is the linkage of Condition Reports (CRs) to a Work Order (WO). The current CAP process still allows the closure of CRs to WOs, even if the WO is open and the required corrective action has not been completed. The linkage of a CR to a WO makes the process more complex and leaves room for the potential failure to complete a corrective action. In fact, the SR Assessment Team's review determined that errors relative to linkage of CRs to WOs continued to occur in 2009, as documented in ENVY CRs and Self-Assessments.

In general, most corrective actions were found to be timely and effective. Quality Assurance Audits/Surveillances and station Self-Assessments were also found to be sufficiently self-critical. In its current form, with the exception of CRs linked to WOs and the tolerating long standing equipment issues, the corrective action process meets industry standards.

1.15 AOG System Summary Conclusions

Based on the document reviews and interviews noted above the following is a summary of AOG System assessment conclusions. More detail has been provided at the end of each individual criterion.

The ENVY engineering design process is well documented, controlled, and consistent with industry practice. The current design of the AOG System is consistent with its original design basis and is adequately reflected in plant records and procedures.

ENVY has formal processes to ensure that when engineering changes are implemented for the AOG System that reviews are conducted to ensure the required changes are made to the operating procedures; that the training materials are updated; that the required training is conducted; and, that the simulator is modified to accurately reflect plant conditions. These processes are consistent with industry practices.

ENVY has formal processes for identifying, addressing, and correcting unanticipated operations outcomes. Unanticipated plant events are promptly entered into the CAP and are appropriately classified for level of analysis. The corrective action system tracks the implementation of corrective and compensatory measures for the AOG System when issues arise, including the revision of appropriate documents. These processes are consistent with industry practice.

The data reviewed and interviews conducted indicate that the AOG System is tested, inspected, and maintained consistent with industry standards such as INPO AP-913, Equipment Reliability Process. Component classification was performed; PM Basis documents created; and, planned maintenance and inspections were scheduled and carried out. The ENVY implementation of the PM Program is consistent with industry good practices.

AOG System issues are being appropriately entered into the Corrective Action Process. Corrective actions are appropriately created and assigned to address issues. However, ENVY has not been consistently effective at scheduling, prioritizing, and carrying out the action plans in a timely manner. The SR Assessment Team found examples of equipment reliability issues on the AOG system that were allowed to linger until they caused adverse consequences. Examples discussed in the SR were hydrogen analyzers, steam traps, steam trap drain lines, and the AOG recombiner inlet valve AOV-OG-101A. This inability to consistently carry out effective corrective action plans and implement the proper repairs in a timely manner could challenge the future reliability of the AOG system.

There are indications that underground pipe leaks could represent future plant reliability issues. Proper management of underground assets (pipes and tanks) is considered a watch area.

1.16 References

Procedures and Specifications

1. AP 0020, Rev. 78, Control of Temporary and Minor Modifications
2. AP 6008, Rev. 3, Vermont Yankee Design Change (Now Obsolete)
3. CEP-BTP-0100, Rev. 0, Buried Piping and Tanks Inspection and Monitoring
4. EN-DC-100, Operating Experience Program
5. EN-DC-115, Rev. 8, Engineering Change Process
6. EN-DC-118, Rev. 3, Engineering Change Closure (Now obsolete)
7. EN-DC-126, Rev. 3, Engineering Calculation Process
8. EN-DC-141, Rev. 6, Design Inputs
9. EN-DC-143, Rev 9, System and Component Health Reports
10. EN-DC-153, Rev 4, Preventative Maintenance Component Classification
11. EN-DC-159, Rev 3, System Monitoring Program
12. EN- DC-167, Rev 2, Classification of Systems, Structures, and Components
13. EN-DC-175, Rev. 3, Single Point Failure Review Process
14. EN-DC-178, Rev 2, System Walk-downs
15. EN-DC-195, Rev. 4, Margin Management
16. EN-DC-310, Rev 4, Predictive Maintenance Program

17. EN-DC-313, Rev. 2, Procurement Engineering Process
18. EN-DC-315, Flow Accelerated Corrosion Program, revision 3
19. EN-DC-320, Rev. 2, Identification and Processing of Obsolete Items
20. EN-DC-324, Rev 6, Preventative Maintenance Program
21. EN-DC-325, Rev 4, Component Performance Monitoring
22. EN-DC-336, Rev 2, Unit Reliability Team
23. EN-DC-343, Rev. 2, Buried Piping and Tanks Inspection and Monitoring Program
24. EN-HU-103, Rev. 2, Human Performance Error Reviews
25. EN-LI-102, Rev. 14, Corrective Action Process
26. EN-LI-113, Rev. 5, Licensing Basis Document Change Process
27. EN-LI-119, Rev. 6, Apparent Cause Evaluation (ACE) Process
28. EN-OP-104, Rev. 4, Operability Determination
29. EN-OP-155, Rev. 9, Conduct of Operations
30. EN-PL-161, Rev. 0, Equipment Reliability Policy
31. EN-PL-170, Rev. 2, Nuclear Asset Management Planning Policy
32. EN-TQ-201 Rev. 11, Systematic Approach to Training Process
33. OP 0150, Rev. 172, Conduct of Operations and Operator Rounds
34. OP 2150, Rev. 65, Advanced Off-Gas System and Air Evacuation Equipment
35. Suntac Specification 33600-1300-313, dated 9/13/72, Specification for Off-Gas System Piping Design
36. Suntac Specification 33600-1300-310, dated 8/7/72, Specification for Piping Materials
37. Suntac Specification 33600-1300-312, dated 8/18/72, Specification for General Piping Fabrication and erection for Off-Gas Modification System"

Documents

1. Vermont Yankee UFSAR, Rev. 22
2. License Renewal Application, dated January 25, 2006
3. Power Uprate Licensing Application dated, September 10, 2003
4. NRC Safety Evaluation for License Renewal, March, 2007
5. Modification Package ER 05-0138, AOG Cooler/Condenser Steam Trap High/Low Level Alarm Removal
6. Modification Package ER 06-1350, Piping Material Change for Small Bore Piping Systems

7. Topical DBD for External Events, Rev. 2, August 15, 2008
8. Topical DBD for Safety Analysis, Rev. 4, September 29, 2005
9. DBD for Accident - Event Combinations Topical, Rev. 6, June 29, 2007
10. ERC No. 2002-011, AOG System, Structure, and Component Seismic and Safety Classification, dated 3/25/02
11. YAEC, dated June, 1972, "Vermont Yankee Advanced Off-Gas Description and Operation"
12. AMRM-26, Rev. 2, Aging Management Review of the Main Condenser and MSIV Leakage Pathway
13. Technical Evaluation No. 2003-049
14. Vermont Yankee FSAR, Section 1.6.4.3.5, 1.6.1.6.3, Table 1.6-2, 9.4
15. Advanced Off-Gas System Presentation, ESP-00-271, ESX-27-401
16. 10CFR50.65 Maintenance Rule Scoping Basis Document for AOG
17. Technical Specifications section 3.8.J and 3.8.K
18. LOT-00-271, Rev. 19, Advanced Off-Gas System
19. AOR-25-205, Rev. 0, Responses
20. LOR-25-205, Rev. 0, Responses
21. ER 2005-0138 AOG Cooler/Condenser Steam Trap High/Low Level Alarm
22. EPRI 1015425, Recommendations for an Effective Flow-Accelerated Corrosion Program (NSAC-202L-R3) Non-Proprietary Version, August 2007
23. Piping Stress Analysis Report Part 1, April 1973
24. Piping Stress Analysis Report Part 2, April 1973

Drawings

1. Flow Diagram A.O.G., VY-E-75-001, .11
2. Miscellaneous piping drawings
3. A-13019, Yard Piping – Underground Plans & Sections Off-Gas Modification
4. G-191162 Sh.3, Flow Diagram Miscellaneous Systems Exhaust Stack & Off-Gas
5. G-191190, Off-Gas Piping – Turbine Building
6. MD-49698-600, AOG Drain Line 2"-CNPE-172A
7. G-191191, Off-Gas Piping Yard
8. 33600-A-201, Engineer Flow Diagram Lead Sheet Off-Gas Modification
9. A-13010, Piping Arrangement Trench-AOG BLDG – Plans & Sects
10. A-13011, Underground Piping AOG Bldg Off-Gas Modification

11. A-13013, Plans & Details – Trench Piping Existing Turbine Building Off-Gas Modification
12. A-13020, Sheet 1&2, Yard Piping Details Plan & Sections Off-Gas Modification AOG System Bypass Tie-Ins
13. VY-E-75-001.11, Flow Diagram AOG

NRC Inspection Reports

1. NRC Integrated Inspection Report 05000271/2006005, dated January 19, 2007
2. NRC Integrated Inspection Report 05000271/2007002, dated May 1, 2007
3. NRC Problem Identification and Resolution Inspection 05000271/2007007 dated December 19, 2007
4. NRC Integrated Inspection Report 05000271/2008005, dated January 28, 2009
5. NRC Problem Identification and Resolution Inspection 05000271/2009006 dated June 3, 2009
6. NRC Integrated Inspection Report 05000271/2009003, dated July 29, 2009

2.0 Buried Piping and Tank Inspection Program

2.1 Introduction

The S R Assessment Team performed an assessment of the ENVY Buried Pipe and Tank Inspection Program (BPTIP). The scope of this BPTIP evaluation includes piping and tanks that are buried and directly in contact with soil or concrete. The ENVY BPTIP only addresses external (Outside Diameter) corrosion mechanisms. This is consistent with industry practice. Internal pipe and tank degradation mechanisms at ENVY are addressed by other technical programs such as Flow Accelerated Corrosion (FAC) and Microbiologically Induced Corrosion (MIC). Due to the inaccessible nature of buried pipes and tanks and their exposure to a potentially corrosive environment, an effective program to identify risks and mitigate potential failures is important to help ensure long term equipment reliability. As part of the scope of the original Comprehensive Reliability Assessment in 2008, a review of the BPTIP as it pertains to the Service Water System was performed. In 2008, a limited amount of industry guidance was available to support the development of BPTIP programs. The program at ENVY was in the early stages of development. All initial BPTIP development actions were consistent with industry practices in place at that time. Since then, ENVY has made changes to the BPTIP program in response to industry initiatives such as the publishing of Electric Power Research Institute (EPRI) guidance document 1016456 in December 2008, and the creation of a Nuclear Energy Institute (NEI) industry initiative number 09-14 in November 2009. The NRC has also recently provided guidance for aging management programs that should include preventative measures to mitigate corrosion and perform periodic inspections to manage the effects of corrosion on the pressure-retaining capacity of buried steel piping and tanks. The NRC guidance is contained in the Generic Aging Lessons Learned Report Section XI.M34.

While there seems to be general agreement among the utilities actively involved in implementation of BPTIP programs, the US nuclear industry has not yet clearly established formal industry wide standard definitions for “underground piping” or “buried piping”. This is evidenced by the fact that the recent EPRI guide does not specifically document these definitions in the most recent guideline and that NEI, INPO and the NRC have not established standard definitions. For providing clarity within this report, the following definitions were applied by the SR Assessment Team:

<u>Underground Piping Definition</u>

A pipe or any part of a pipe that is below grade level and external to a building, including but not limited to:

- A pipe contained within a trough, tunnel or duct
- A pipe that is inside of a protective sleeve (such as a pipe within a pipe)
- Buried piping (refer to “Buried Piping” definition)

Buried Piping Definition

Buried piping is a subset of underground piping that includes:

- A pipe (including any pipe coating) that is either directly in contact with soil or,
- A pipe directly encased in concrete material and beneath the soil.
  Note: Pipe coatings are considered part of the pipe[9]

This definition is consistent with the current definition applied by Entergy and ENVY for "buried section" pipe.

This Supplemental Report scope does not include a horizontal evaluation of ENVY's program or practices for managing "Underground Piping". The AOG vertical slice assessment section addresses underground piping as part of that system. Also, Appendix 1 addresses underground piping inspections, leak mitigation, and performance monitoring as it pertains to the AOG pipe leak event in January, 2010.

2.2 Nuclear Industry Background

Nuclear industry efforts focusing on the degradation of buried piping are fairly recent. Degradation of buried piping is an issue facing all nuclear power plant owners. When buried pipes leak, the source of leakage can be difficult to locate, access, and repair in a timely manner. The integrity of buried piping has received increased interest from the Nuclear Regulatory Commission (NRC) via Inspection Procedure 62002 and license renewal reviews. Additionally, the NRC has performed an evaluation of buried piping at nuclear reactor facilities described in SECY-09-0174, after tritium was found in groundwater monitoring wells at several stations including Oyster Creek (4/15/09 and 8/25/09), Dresden (6/5/09), and Peach Bottom (7/9/09).

In 2007, the Institute of Nuclear Power Operations (INPO) made buried piping a focus area and began to assess buried piping degradation management as part of their performance-based evaluations.

ENVY is a member of the Electric Power Research Institute (EPRI). EPRI has recently established industry good practices for managing buried piping programs at power plants. In December 2008, EPRI published Recommendations for an Effective Program to Control the Degradation of Buried Pipe. The stated purpose of this document is to provide plants with guidance on implementing a preventative maintenance program to detect and mitigate degradation in piping before leakage occurs. In November 2009 the Nuclear Energy Institute

[9] This definition of "underground pipe" was arrived at by the DPS and the POP with NSA input into the discussion.

created a Buried Piping Integrity Initiative. This initiative is described in NEI 09-14, Guideline for the Management of Buried Piping Integrity, dated 2/4/10. The guideline endorses EPRI 1016456 as a document to use to set up a buried piping program and lays out a timeline for each of the following major milestones:

1. Procedures and Oversight – due by June, 30, 2010
   - Ensure clear roles and responsibilities including senior level accountability for the Buried Pipe Integrity Program.
   - Develop a Buried Pipe Integrity Program document and implementing procedures.

2. Risk Ranking – Risk rank buried piping segments due by December 31, 2010.
   Risk ranking shall incorporate the following attributes:
   - Pipe function.
   - Pipe locations and layout.
   - Pipe materials and design.
   - Health of cathodic protection systems, if applicable.
   - Based on the above data and other information:
     - The likelihood of each piping segment to not meet the applicable code criteria.
     - The consequences of failure of each piping segment.
   - A means to update the risk ranking as necessary.
   - A database to track key program data, inspection results, and trends.

3. Inspection Plan – due by June 30, 2011
   Develop an inspection plan to provide reasonable assurance of integrity of buried piping. This plan shall include the following key attributes:
   - Identification of piping segments to be inspected.
   - Potential inspection techniques.
   - Inspection schedule for buried piping segments based on risk ranking.
   - Assessment of cathodic protection, if applicable.

4. Plan Implementation – start no later than June 30, 2012
   Implementation of the Inspection Plan shall start no later than June 30, 2012. The condition assessment of buried piping containing radioactive material shall be completed by June 30, 2013.

5. Asset Management Plan – in place by December 31, 2013
   Inspection results shall be used as input to the development of an asset management plan for buried piping. This plan shall receive a high level of review and approval and will be in place by December 31, 2013.

2.3 Industry Involvement

The Entergy Corporation, as a whole, is significantly involved in the nuclear industry's buried piping initiatives. The following Entergy involvement was noted during the assessment:

- Entergy is the chair of the EPRI Buried Piping Integrity Group.
- Entergy buried piping corporate engineer is on the steering committee of the BOP Corrosion Program. The BOP Corrosion Program includes the Buried Piping Integrity Group.
- Entergy VP of Engineering is vice-chair of the EPRI Equipment Reliability research area committee. The Equipment Reliability area encompasses the BOP Corrosion Program.
- EPRI 1016456, Recommendations for an Effective Program to Control the Degradation of Buried Pipe, 4 out of 31 contributors are from Entergy.
- Entergy corporate buried piping engineer is on the NEI Buried Piping Industry Task Force and has participated in public meetings with the NRC on the subject.

The Entergy fleet Buried Piping Program owners conduct a phone conference every two weeks to share experiences and present the status of the buried piping program development. The purpose of the phone conference is to provide corporate governance, oversight, and support where needed to each member of the Entergy fleet. ENVY participates in this phone conference and, therefore, reaps the benefits of Entergy's industry involvement. Entergy also participates in the periodic EPRI Buried Piping Integrity Group (BPIG) meetings. The BPIG is currently represented by all US nuclear utilities. Entergy, along with the rest of the nuclear industry, has committed to implement the industry initiative in NEI 09-14. In conclusion, Entergy and ENVY are appropriately involved with the industry in the early stages of development of buried piping program standards.

2.4 Evaluation Methodology

The goal of this SR section is to determine if the ENVY BPTIP provides reasonable assurance of the structural integrity of buried piping; minimizes forced outages and emergent repairs; and, enables ENVY personnel to implement well planned repairs of buried piping in a timely manner thereby contributing to reliable plant operation. As noted above, the buried piping programs across the nuclear industry are currently evolving and maturing. This includes Entergy and Vermont Yankee. However, the stated goal of this assessment remains the same. The BPTIP program at ENVY must ultimately provide reasonable assurance of long-term plant reliability.

This SR section assessment was performed through a variety of methods including document reviews, site visits, system walk-downs, plant personnel interviews, and comparison with current industry standards and practices.

Interviews were conducted with the ENVY BPTIP Program Owner, the ENVY Code Programs Supervisor, and the Entergy Fleet Chief Engineer overseeing Buried Piping Programs. Program documents and corrective action documents related to buried piping were reviewed in detail.

EPRI document 1016456, Recommendations for an Effective Program to Control the Degradation of Buried Pipe, contains a series of recommendations to follow when setting up a buried piping program. This assessment compared the ENVY BPTIP to the EPRI recommendations and the NEI implementation schedule to determine if ENVY is following the industry approach. The assessment then verified that ENVY is following its program procedures. This assessment was performed by checking samples of documents from the program (spot checks) and by collecting verifiable facts.

2.5 Evaluation and Technical Basis

The focus of this section is only on the buried piping program. The buried pipe environment can be highly corrosive to steel pipes. The contact between the soil and the pipe wall can cause the metal wall of the pipe to corrode to the point where it becomes a "through wall failure" meaning the fluid contained by the piping system can exit the system. The environment of some underground piping is typically less corrosive to metal pipes because some underground pipes are surrounded by air as opposed to soil. Also, some underground pipes often have an additional barrier to external leakage such as a concrete trench or vault. For these reasons, the industry, as guided by EPRI and NEI, have placed its focus, at least for now, on buried pipes as opposed to underground pipes. The NRC however has not restricted itself with regards to buried versus underground pipes. The NRC regulates systems based on their safety function and design bases. The NRC inspection programs regulate long term reliability and aging management by analyzing the system's environment, material of construction, and applicable aging mechanisms. The NRC inspection programs encompass all safety related piping systems, regardless of their position relative to the surface grade.

Vermont Yankee Nuclear Power Station began commercial operation in 1972. Much of the buried piping is thus of the same vintage or slightly older. The ultimate goal of a well established buried piping program would be to provide reasonable assurance of structural and leakage integrity of all buried piping with special emphasis on piping that contains radioactive materials. It also addresses fluids that would be harmful to the environment, such as fuel oil. The key objective of a good program is to drive proactive assessment and management of the condition of buried piping systems. This assessment focused on the potential for buried piping deterioration to impact the ability of the plant to maintain high levels of reliability over a 20 year extended life.

2.6 ENVY BPTIP Structure

EPRI document 1016456, Recommendations for an Effective Program to Control the Degradation of Buried Pipe, recommends that a Buried Piping Integrity Program Plan should be developed. ENVY has accepted this recommendation, along with the entire Entergy fleet, and has created an action plan to implement an acceptable program. The steps required to develop the ENVY program are contained in corrective action document LO-HQNLO-2008-00015. The steps were reviewed by the SR Assessment Team. The plan is comprehensive and responsive to

the growing amount of industry information available. The plan is a dynamic plan, meaning it is updated as new information is gathered. The plan currently contains several hundred discrete action steps. Steps are added as the program grows and as the industry standards evolve. The action plan is updated by the fleet chief engineer in charge of buried piping and approved by the Engineering Directors on a quarterly basis.

A review of EPRI document 1016456, Recommendations for an Effective Program to Control the Degradation of Buried Pipe, shows that the Entergy program procedures are based on the structure and content in the EPRI document. Adopting the industry endorsed approach will benefit ENVY by sharing industry operating experience, and will allow for better inspections and peer assessments in the future. The EPRI document contains the following six major program elements:

1. Procedures and Oversight
2. Risk Ranking
3. Inspections
4. Fitness-for-service
5. Repairs
6. Prevention and Mitigation

Review of the ENVY procedures shows that the ENVY BPTIP follows this structure. Each of these six elements, and the EPRI recommendations that apply to each, are discussed in more detail below. In order to distinguish the EPRI recommendations, they have been numbered as they appear in the EPRI document and placed in text boxes. A discussion on how ENVY complies with the recommendation follows each text box. The recommendations are grouped according to the six elements mentioned above.

2.6.1 Procedures and Oversight

<u>Policies and Procedures</u>

A.1.1 Policies and Procedures

- A Buried Pipe Integrity Program Plan and implementing procedures should be developed.

At ENVY, the BPTIP program is governed by an Entergy Fleet procedure, EN-DC-343 and is implemented by a corporate engineering procedure, CEP-BPT-0100. The fleet approach allows for consistency, sharing of resources, and provides a means of disseminating operating experience among the nine nuclear units and corporate offices of Entergy. The ENVY BPTIP is owned by the Code group, which is part of the Programs and Components Engineering section.

The BPTIP program owner is a civil engineer who is familiar with piping and piping issues. The program owner appears to have a sufficient amount of resources and oversight required to sufficiently implement the BPTIP at ENVY.

Procedure EN-DC-343, Revision 2, was issued 10/30/2009 as a complete rewrite of the previous procedure due to the issuance of EPRI document 1016456. The Change Management Checklist (EN-PL-155 form) for this new procedure indicated that the only change management required was to communicate the change effectively. Although a presentation was given at a Leadership and Alignment Meeting soon after the procedure was issued, this single action does not appropriately implement the Change Management policy as described in EN-PL-155. The ineffective use of the Change Management process was noted as a watch area in the original Comprehensive Reliability Assessment. This continues to be a watch area for ENVY.

Program Population and Database

A.1.2 Program Database

- A database should be developed to track key program data and performance indicators.

Procedure EN-DC-343, Buried Pipe and Tank Inspection Program (BPTIP), requires each Entergy site to develop its own specific program. BPTIP requirements are contained in CEP-BPT-0100 which was issued on 10/30/2009. CEP-BPT-0100, Buried Piping and Tank Inspection and Monitoring, requires that each site identify the buried components in the program, perform a corrosion risk assessment, perform an impact assessment of each component, and establish applicable inspection priorities and intervals. The BPTIP piping list was developed in response to these requirements.

The SR Assessment Team reviewed three revisions of the buried piping list provided by ENVY. Each revision is a further refinement of the list as the BPTIP was developed and implemented. The first two revisions were reviewed as part of the original CRA while the third revision was reviewed as part of the current BPTIP assessment. A continual and gradual refinement of the BPTIP population is consistent with industry standards.

The first list, which was initially developed in June and July of 2008, was provided to the original CRA team in November, 2008. There is no formal, standardized process in place at ENVY or the industry for development of a Buried Piping List. The approach utilized by ENVY for developing the list was formulated by a team consisting of the BPTIP program owner and his immediate supervisor, as well as the previous program owner. The approach was discussed with the program owners at other Entergy plants during peer review teleconference calls. ENVY used a combination of document reviews, interviews, and walk-downs to develop the list. ENVY utilized the a 2006 groundwater study, which forms the basis of its groundwater monitoring

program, as the starting point for identifying buried piping. This study provided component descriptions and drawing references. When they completed review of all applicable documents, they considered the initial list complete. The list was then subject to a peer review. The list included information on pipe size, material, coatings, and cathodic protection. The list contained 13 columns and 85 line entries of which 16 entries were identified as AOG piping.

The second revised list was also provided to the original CRA team in November, 2008. This list was expanded to include the information contained in the first list, plus risk assessments for material, cathodic protection, and coating. It also included a public risk and economic risk assessments. The list contained 22 columns and 92 line entries of which 19 were identified as AOG piping. The column for public risk indicated rankings of high, medium, or low risk. That column included 77 entries that were designated as having a high public risk. Among the lines denoted as high public risk were fire protection, AOG, circulating water, floor drains, house heating boiler, instrument air, RHR service water, standby gas, and corrugated yard drains. All of the AOG lines on this list were identified as high public risk. High public risk is defined in the current CEP-BPT-0100 procedure as pipes that contain radioactive contamination, e.g. tritium. Although many of the lines obviously did not meet the definition of high public risk, ENVY conservatively ranked all lines with the intention of refining the risk ranking later.

In December, 2008 EPRI published guidelines for buried piping programs.

In January, 2010, the program owner entered five additional lines on the list as a result of personally performing a drawing review. This third revision of the list was independently reviewed, and one additional line was added to the list as a result of that review. The current list was provided to the SR Assessment Team in January, 2010. This list contains 32 columns and 98 line entries of which 24 were identified as AOG piping. The list included the information from the second revision of the list noted above and was expanded to include soil resistivity and drainage information, impact assessment, corrosion risk, and inspection intervals, and priorities. At this time the public risk column includes 41 entries denoting high public risk. All but one of the AOG lines are identified as high public risk. The reduction in the number of entries for high public risk is a result of further refinement of the conservative ranking noted for the previous list. As part of this assessment, 74 miscellaneous piping drawings that were utilized in the generation of the buried piping list for the BPTIP were reviewed. These included 12 drawings specifically applicable to the AOG System. The SR Assessment Team verified that buried piping identified during this January 2010 drawing review was included on the current buried piping list.

A comparison of the AOG piping on the latest two revisions of the list indicates that some lines were removed from and some lines were added to the third revision of the list. These changes show that the program is evolving and undergoing continuous refinement.

Until recently, the list was considered a notebook document, meaning it was not in the formal nuclear configuration control program. On February 22, 2010, more stringent controls were implemented. These controls will apply until ENVY is ready to implement the Fleet standard

guidance. These more stringent controls include access control requiring a user ID and a password. The list is write-protected with only the BPTIP program owner and his or her immediate supervisor having the ability to make changes to the list. Also, revision numbers are now noted on the list. In the future, ENVY will follow the Entergy fleet procedure CEP-COS-0100, Control and Use of IDDEAL Concepts Software. CEP-COS-0100 will apply appropriate controls to the BPTIP piping list once ENVY adopts its use. The controls currently in use at ENVY are consistent with industry practices and are considered acceptable until ENVY adopts the standard fleet software. The migration of the program population from its current form to its final form, the fleet standard format, will be monitored by the DPS as part of the BPTIP implementation. The overall implementation of the BPTIP is being considered a watch area at ENVY.

Performance Indicators

A.1.3 Performance Indicators

- System or program health reports and performance indicators should be developed for the Buried Pipe Integrity Program. The performance indicators should be periodically tracked and reported to management.

The BPTIP program owner maintains a program notebook and publishes a Program Health Report in accordance with EN-DC-174. A review of the 4th quarter 2009 Program Health Report structure shows that it contains several relevant performance indicators, which are listed below:

- Overall Program Health
- Personnel Cornerstone
- Infrastructure Cornerstone
- Implementation Cornerstone
- Equipment/Related Plant Performance Cornerstone

The BPTIP Program Health Report is available on a shared drive of the ENVY computer network. The SR Assessment Team reviewed the 4th quarter 2009 BPTIP Program Health Report content. The Health Report is comprehensive and focuses on equipment reliability. The report is consistent with industry standards. The Program Health Reports are reviewed by supervision and management in accordance with EN-DC-174. The current overall status of the BPTIP is “white” which denotes overall acceptable performance of the program with only minor deficiencies noted.

2.6.2 Risk Ranking

Scope Drawings

A.2.1 Scope Drawings

- A set of as-built drawings should be assembled, showing the buried pipe routes, including their location relative to other buried and aboveground buildings, structures and commodities.

ENVY has met this recommendation. A check of the BPTIP program owner's drawing file reveals a comprehensive set of buried piping plant drawings.

Route Confirmation

A.2.2 Route Confirmation

- The buried pipe routes and adjacent buried commodities should be confirmed through field surveys.

Although the EPRI document recommends that buried piping routes should be confirmed through field surveys, this is not typically done at nuclear plants and was not done at ENVY. It is not practical due to the large network of underground and buried pipes. Route confirmation was performed through the use of plant drawings and walk-downs of accessible and visible portions of the piping systems. ENVY is consistent with industry practices used to meet this EPRI recommendation.

Scope Exclusion

A.2.3 Scope Exclusions

- Buried piping segments whose failure is inconsequential, and would cause no direct or collateral damage, may be excluded from the scope of the buried piping integrity program.

Piping may be excluded from the program if the failure is inconsequential. ENVY has stated that its approach has been to include all buried piping in the program, and then rank piping with low failure consequences accordingly. This meets the EPRI recommendation A.2.3.

Data Collection

A.2.4 Data Collection

- Line-specific data should be collected and compiled for use in risk ranking, inspection planning, and fitness-for-service assessment. The line should be subdivided into segments of similar characteristics.

Data on each buried line has been collected and compiled by the BPTIP owner. This information is stored in an Excel spreadsheet. Corrective action LO-HQNLO-2008-0015-CA 299 will ensure all buried piping lines are reasonably segmented in the IDDEAL Concepts Database. This action is due 6/28/10. When completed this will meet the EPRI recommendation and is consistent with the practices of others in the industry. The current data set does not meet the EPRI recommendation because it has not yet been segmented; therefore, this area will need to be monitored as part of the BPTIP implementation watch area.

Soil Analysis

A.2.5 Soil Analysis

- Soil analysis data should be collected to assess the likelihood of Outside Diameter (OD) corrosion.

Soil Analysis data has not been factored in to the risk ranking yet because the data is not available. To compensate for the lack of data, all soil is treated as highly corrosive in the risk ranking calculations. An action item to acquire and incorporate soil analyses is included in the Entergy Buried Piping/Tank Action Plan. The estimated completion date for this action item, stated in the 4th quarter 2009 program health report, is in the spring of 2010. The lack of soil data is actively being tracked as a Performance Indicator. This is adequate for a BPTIP program that is currently evolving along with the rest of the industry's program. The recently issued industry initiative NEI 09-14 calls for risk rankings to be completed by 12/31/2010. ENVY is on track to meet this goal. The DPS will monitor the completion of this action item as part of the overall BPTIP watch area.

CP Check

A.2.6 CP Check

- Where buried pipes are protected by a Cathodic Protection (CP) system, the CP system should be periodically inspected and tested to assess its continued adequacy.

Currently, only the buried House Heating Boiler (HHB) fuel oil lines have a cathodic protection system installed at ENVY. A request to abandon the House Heating Boiler (HHB) fuel oil line cathodic protection system was recently granted per ECR 9024. The cathodic protection system was found to be ineffective according to CR-VTY-2009-00856. The CR evaluation states that the HHB lines are protected with a bitumastic wrapping and, therefore, do not require an active cathodic protection system. Protective coatings are an effective method of preventing buried pipe corrosion. Based on the discussion above this EPRI criterion is no longer applicable to ENVY.

Over-the-Line Surveys

A.2.7 Over-the-Line Surveys

- It is recommended that over-the-line surveys be conducted as part of Risk Ranking, to help assess the likelihood of OD corrosion. The surveys should be conducted periodically and the likelihood of corrosion should be updated accordingly.

Over-the-line surveys are not performed at ENVY. An over-the-line survey is a method used to determine the likelihood of OD corrosion on a buried pipe. This method can help determine the condition of the external coatings of buried steel pipes, but is generally not feasible for use at nuclear plants.

At ENVY, the condition of external coatings will be determined through direct visual inspection methods. Although this method is more intrusive and costly, it is more effective. Visual inspection is commonly used in the industry to determine the condition of buried pipe coatings. Therefore, ENVY is aligned with industry best practices. The actual coating condition is not currently factored into the risk ranking because the data is not available. To compensate for the lack of data, the pipes are treated as if they have no coating at all, which is a conservative approach. As coating inspections are performed in the future, the results will be used to refine these assumptions. Site operating experience identified that buried pipe coating has been found in excellent condition in the past. The status of coatings inspections is tracked by a program Performance Indicator. This is adequate for a BPTIP program that is currently evolving along with the rest of the industry. The recently issued industry initiative NEI 09-14 calls for risk rankings to be completed by 12/31/2010. ENVY is on track to meet this goal and is aligned with industry standards. Completion of this action item should be monitored as part of the overall BPTIP watch area.

Inside Diameter (ID) Corrosion Assessment

A.2.8 Inside Diameter (ID) Corrosion Assessment

- The potential for fluid-side corrosion and fouling of buried pipe should be evaluated to determine the likelihood of failure.

ENVY separates Outside Diameter (OD) corrosion programs from Inside Diameter (ID) corrosion. This is consistent with industry standards. ID corrosion programs at ENVY are well established. According to procedure EN-DC-343 Revision 2, the BPTIP specifically consists of inspection and monitoring of the outside (OD) surfaces of pipes and tanks. These are the surfaces which would be exposed to the soil. Internal surfaces are covered by other programs, such as the Microbiologically Influenced Corrosion (MIC) Program and the Flow Accelerated Corrosion (FAC) Program. A spot check of a completed work order, WO 128291 dated 10/27/08, verified that the internal inspection programs are being used when piping systems are breached. This meets the EPRI recommendation A.2.8.

Likelihood of Failure, Consequence of Failure, and Risk Ranking

A.2.9 Likelihood of Failure

- The likelihood of failure (e.g., low, medium, high) should be determined for each segment of the buried pipe system for each failure mode.

A.2.10 Consequence of Failure

- A consequence of failure should be determined for each segment and each failure mode.

A.2.11 Risk Ranking

- Following the determination of likelihood and consequence of failure for each segment and each failure mode, a risk rank should be determined for each segment in order to prioritize inspections or other failure prevention measures.

As recommended by EPRI, ENVY buried pipe segments are ranked on the basis of risk. Risk is the combination of the likelihood of failure and the consequence of failure. ENVY risk ranking was performed in accordance with CEP-BPT-0100. The likelihood of failure ranking considers four factors: 1) Soil Resistivity; 2) Soil Drainage; 3) Piping or Tank Material; and, 4) Cathodic Protection/Coating. Two of these categories, soil resistivity and coating, are scored conservatively high due to a lack of data as previously discussed. This approach tends to create artificial clusters of highly ranked pipelines. This reduces the effectiveness of the ranking scale

and can mask true problem areas. The consequence of failure ranking considers three factors: 1) safety class; 2) public risk; and, 3) economic impacts. This approach to risk ranking is consistent with industry standards. The use of additional ranking factors would help to refine the ENVY risk ranking, and is currently being evaluated by the fleet program owner. Using the methodology described in CEP-BPT-0100, the SR Assessment Team verified the risk ranking was correct for a sampling of pipe segments.

Ranking Update

A.2.12 Ranking Update

- The risk ranking should be periodically reviewed and updated as necessary.

As recommended by EPRI, ENVY reviews and updates the risk ranking periodically. Updates are scheduled and tracked by the corrective action process. The next scheduled risk ranking review for ENVY is being tracked by LO-HQNLO-2008-00015 CA-270 with a due date of 6/30/10. This meets the EPRI recommendation.

2.6.3 Inspections

Inspections

A.3.1 Inspections

- In general, inspections should be performed at the piping locations that have the highest risk rank. Other considerations such as access may also be considered when the relative risk rankings are similar.

Historically, buried pipe inspections at ENVY have been based on opportunistic inspections. To date, three such opportunistic inspections have been conducted for which inspection records were maintained, a 24-inch service water system pipe in 2003, a 12-inch fire protection system pipe in 2007, and a 78-inch turbine vent duct in 2006. These inspections were conducted in accordance with the requirements of PP 7030 Structures Monitoring Program Procedure LPC No. 1 dated July 9, 2002. In each case the examined portion of the pipe was in excellent condition.

The ENVY Work Management program has been changed to include a notification to the buried piping program owner any time a buried pipe is excavated. The SR Assessment Team verified that this notification was contained in WO 219750. This notification was also verified to be included in Excavation Permit #2010-007, which is the excavation permit for the current AOG leak investigation. Section 6 of the Entergy Buried Piping/Tanks Action Plan details the Entergy

plan to develop and implement an inspection schedule. Funding requests are in place with the ENVY Unit Reliability Team (URT) for the cost of the future inspections. The Entergy Buried Piping/Tanks Action Plan will require inspections to be placed in to the Preventative Maintenance Program by 10/29/10 for buried pipes containing radioactive material, and by 2/28/11 for other buried pipes. This is well ahead of the NEI industry initiative required dates. NEI 09-14 requires an inspection plan to be developed by 6/30/11 and then implemented beginning no later than 6/30/12.

Several inspection methods are given in the EPRI document:

- Visual examination.
- Liquid penetrant testing.
- Magnetic particle testing.
- Ultrasonic testing.
- Guided wave.
- Radiography.
- Pulsed eddy current testing.
- New methods in development.

These inspection methods are discussed in ENVY procedure CEP-BPT-0100. CEP-BPT-0100 is available for use during the planning stages of a buried pipe inspection. The fleet engineer overseeing buried piping programs is actively involved in the evaluation of new inspection techniques as they are being developed and tested by the nuclear industry.

Coating Inspections

A.3.2 Coating Inspections

- When a buried pipe is uncovered, the coating should be inspected by a coating specialist. The results should be documented and include relevant photographs or video.

Coating inspections are performed at ENVY using engineering standard EN-EP-S-002-MULTI, Buried Piping and Tanks General Visual Inspection. Revision 0 of the standard, issued on 10/30/09, was reviewed and found to be consistent with the guidance provided in the EPRI document 1016456 and other pertinent guidance documents, including the NRC NUREG-1801, Generic Aging Lessons Learned (GALL) Report. The standard gives a good level of detail that would allow a qualified individual to perform a thorough, well-documented inspection.

According to the ENVY response to LO-HQNLO-2008-00015 CA 81, there are currently no coatings specialists at ENVY. Coating specialists are typically qualified to the National Association of Coatings Engineers (NACE) level 1 qualification standards. If required at ENVY, a vendor would be contacted to perform the inspection. This meets the EPRI recommendation.

Inspections have been performed on an opportunistic basis. Coatings inspections at ENVY are being planned for the future as part of the BPTIP implementation. Three historical inspections were reviewed from past records by the program owner. In each case the examined portion of the pipe was in excellent condition. Prior to the issuance of ES-EP-S-002-MULTI, inspections consisted mainly of digital photographs which were reviewed by the engineering department. These past inspections are retained in the BPTIP Program Notebook, which is available on a shared network drive. The SR Assessment Team verified that records of historical buried piping inspections were being maintained by the program owner.

On 3/4/10, the SR Assessment Team accompanied ENVY piping inspectors on an opportunistic coating inspection of a 3" circulating water pump priming line, a 1.5" fuel oil line, and a 2" instrument air line uncovered by the ongoing AOG leak investigation. The inspection was performed in accordance with applicable procedures. Photographs were taken and archived. CR 2010-0924 was initiated to document damaged coatings found during the inspection. The damage was superficial damage caused by excavation activities. The coating will be repaired by WR-00193351. Volumetric exams will be performed prior to the repair on the exposed pipe to check for damage to the pipe wall.

ENVY is meeting this EPRI recommendation for coating inspections.

<u>Pipe Inspections</u>

A.3.3 Pipe Inspections

- When a buried pipe is uncovered (OD) or entered (ID) for any reason, as a minimum it should be visually inspected for evidence of corrosion or damage. The results of the inspection should be documented and any relevant photographs or videos should be included.

In accordance with EPRI recommendations, inspections performed by ENVY have been direct visual inspections. This is consistent with industry practices. To date, four such visual inspections have been conducted for which inspection records were maintained. The first three were a 24-inch service water system pipe in 2003, a 12-inch fire protection system pipe in 2007, and a 78-inch AOG system vent duct in 2006. These inspections were conducted in accordance with the requirements of PP 7030 Structures Monitoring Program Procedure LPC No. 1 dated July 9, 2002. In each case the examined portion of the pipe was reported to be in excellent condition.

The fourth inspection, associated with the AOG excavation was witnessed by the SR Assessment Team. The method currently in place for performing a buried pipe inspection is detailed in engineering standard EN-EP-S-002-MULTI, Buried Piping and Tanks General Visual Inspection. Revision 0 of the standard, issued on 10/30/09 was reviewed and found to be consistent with the guidance provided in the EPRI document 1016456 and other pertinent guidance documents, including the NRC NUREG-1801, Generic Aging Lessons Learned (GALL) Report. The standard gives a good level of detail that would allow a qualified individual to perform a thorough, well-documented inspection. The SR Assessment Team verified that the personnel performing the direct visual inspections were qualified in accordance with the procedure per CEP-NDE-100 and/or ASME XI IWA 2321. The SR Assessment Team verified that the inspection was performed in accordance with the guidance given in the engineering standard. The inspection checklist was used correctly and reviewed by the BPTIP owner. Photographs were taken and attached to the report. The inspector was noted to be familiar with the characteristics of the pipe being inspected and the common corrosion mechanisms for the pipe. The inspection site was found to be generally safe, as evidenced by shoring, scaffolding, and safety barriers. This inspection was performed consistent with industry standards and practices.

To date, no programmatically driven pipe inspections have been performed as part of the BPTIP, only opportunistic inspections. As discussed in the section above, scheduled pipe inspections at ENVY are being planned for the future as part of the BPTIP implementation. ENVY is meeting this EPRI recommendation. The DPS will monitor these future inspections as part of the overall BPTIP watch area to ensure that ENVY continues to meet the EPRI recommendations.

Volumetric Inspections

A.3.4 Volumetric Inspections

- Where deemed necessary, a volumetric examination technique should be used to determine wall loss, measure remaining thickness, or to examine a weld. Results should be evaluated for fitness-for-service.

To date, no volumetric inspections of excavated buried pipe have been required. According to interviews conducted with the BPTIP Engineer, a volumetric examination would be used to determine wall loss, measure remaining thickness, or to examine a weld when deemed necessary. Results would be fed in to a fitness-for-service evaluation. The SR Assessment Team reviewed a recent example of using volumetric inspection to evaluate piping fitness for service. Although

the example was not on a buried pipe or tank, it is reasonable to assume that ENVY would use this same examination technique when evaluating buried pipes or tanks. The use of volumetric inspections for metal components is a standard industry practice. The SR Assessment Team review determined that ENVY is consistent with industry standards and is meeting the EPRI recommendation.

2.6.4 Fitness-for-service (FFS)

Design Analysis/Minimum Code Requirement

A.4.1 Design Analysis

- The integrity assessment should be based on the design analysis of the buried piping system. The analysis should be retrieved or re-created if it cannot be retrieved.

A.4.2 Minimum Code Requirement

- The Code required minimum design thickness, t_{min}, to be used in the FFS assessment should be documented before the direct inspections.

The fitness-for-service assessment is described in detail in procedure EN-DC-343, Revision 2. The content of the procedure matches the content of the EPRI document. Fitness-for-service is assessed and documented using the corrective action process. A review of past condition reports on buried piping systems was performed. No fitness-for-service evaluations on buried piping have been performed to date, so an evaluation of a similar component was reviewed. The SR Assessment Team reviewed CR-2008-04562. This CR evaluates a service water pipe that did not meet acceptance criteria when inspected on 10/27/08. The engineering evaluation in CR 2008-04562 includes a design analysis of the pipe system and a review of the design parameters of the component. The evaluation uses the ASME Code minimum required wall thickness to formulate conclusions. It is reasonable to assume that ENVY would employ the same techniques when assessing similar components in the BPTIP, because the same corrective action process is used. Procedural requirements from EN-DC-343 would further reinforce the need to include the design analyses and Code requirement reviews recommended by EPRI. Based on a review of CR 2008-04562 and the BPTIP governing procedures, it is reasonable to assume that ENVY is meeting this EPRI recommendation.

Inspection Data/FFS Assessment Method

A.4.3 Inspection Data

- The inspection results should be compiled and categorized. A projection of future damage should be estimated based on current inspection results and the time to the next planned inspection or repair.

A.4.4 FFS Assessment Method

- Methods and criteria should be in place, prior to inspections, to assess the significance of inspection results, by applying the appropriate FFS assessment method, consistent with the damage mechanism and licensing commitments.

The EPRI document recommends that inspection results should be compiled and categorized. A projection of future damage should be estimated based on current inspection results and the time to the next planned inspection or repair. The SR Assessment Team reviewed CR 2008-04562. This CR describes a steel pipe component that failed inspection criteria. Although, this is not a buried component, it is reasonable to assume that ENVY would follow the same procedures when assessing a buried component because the same corrective action process would be employed. Also, the requirement is stated specifically in EN-DC-343, Revision 2. The CR contains a record of all the inspection results performed. The inspection results are categorized by degradation mechanism as recommended by EPRI. The following degradation mechanisms are discussed in the CR evaluation: general wall thinning; flow accelerated corrosion; and, occlusion. A projection of future damage was made by engineering and the pipe was replaced as a result. Based on a review of the approach taken on a component similar to a buried component, it is reasonable to assume that ENVY is meeting this EPRI recommendation. The evaluation performed by ENVY was consistent with industry practices.

Feedback

A.4.5 Feedback

- The knowledge gained through the FFS process should be used to review and adjust as necessary the risk-informed ranking and the inspection plan.

The feedback process recommended by EPRI is captured in procedure EN-DC-343, Revision 2. To date, no FFS evaluations have been performed so no feedback to the BPTIP has been done. An interview was conducted with the BPTIP owner. The BPTIP owner discussed how the feedback from inspections and piping analyses would be used to adjust the risk ranking and

programmatically-driven inspections. The feedback would be tracked using the corrective action process. Based on the interview with the BPTIP owner, ENVY is meeting this EPRI recommendation.

2.6.5 Repairs

Pre-Approved Repair Options

A.5.1: Pre-Approved Repair Options

- Pre-approved repair options should be in place for prompt implementation in case a buried pipe fails. The detailed design of the selected repair option should accommodate the specifics of the failed line.

Although no buried pipe repairs have been required since the EPRI document 1016456 was issued, there is a current leak investigation ongoing at ENVY. CR 2009-3564 was written on 10/16/09 to document ground subsidence noted in the vicinity of the AOG drain pit. Excavations are currently being performed per WO 219750. The SR Assessment Team conducted an interview with the BPTIP owner and determined that pre-approved repair options are in place. Coating repairs associated with this excavation are discussed under coating inspections. This meets the EPRI recommendation and is consistent with industry practices.

Leak Detection and Isolation

A.5.2: Leak Detection and Isolation

- Leak detection techniques and leak isolation options should be pre-selected for prompt implementation should a leak occur.

Appendix J of the EPRI 1016456 document discusses leak detection and isolation. The Appendix gives examples of parameters that might be indications of a buried pipe leak. One of the examples given is finding the evidence of tritium in groundwater monitoring wells. As discussed in Appendix 1, ENVY employs a wide variety of leakage monitoring techniques, but needs to aggressively develop leak detection methodologies that will find leaks before tritium shows up in the groundwater monitoring wells. Although strictly speaking ENVY meets the EPRI recommendation, this is considered a watch area for ENVY as a result of the assessment performed on the current leak event. As discussed further in Appendix 1 and in CR 2010-00069, ENVY took action to isolate the leak once the source was found.

2.6.6 Prevention and Mitigation

Retrofit

A.6.1 Retrofit
• Where the risk of failure is unacceptable, preventive and mitigative options should be implemented.

Prevention and mitigation of buried pipe leaks are important to equipment reliability. Finding and repairing buried pipe leaks can be disruptive to the plant maintenance schedule and can have serious economic consequences. Replacing buried pipes with upgraded, more corrosion resistant materials can be an attractive retrofit. Rerouting of buried piping above ground is another option. ENVY has researched and used these prevention methods in the past when they upgraded some underground piping materials with more corrosion resistant materials. Prevention and mitigation of buried pipe leaks can best be addressed by having a Long-Term Asset Management (LTAM) Plan for buried piping.

A Long-Term Asset Management (LTAM) plan has three basic elements: a) an understanding of the components' aging mechanisms, effects, and probable failure modes; b) an understanding of the indicators to track the aging mechanisms; and, c) a means to mitigate the effect of the component aging.

According to interviews with the Entergy Chief Engineer who oversees Buried Piping Programs, Entergy is planning on developing a Fleet Strategic Asset Management Plan for buried piping containing radioactive materials. This is essentially an LTAM plan as recommended by EPRI. The LTAM plan uses data and results from the BPTIP to proactively schedule and budget long-term replacement projects. The Chief Engineer indicated the due date for this action will be 8/16/10. He also indicated the proposed action plan will include development of a Fleet Strategic Asset Management Plan for non-radioactive buried piping. The due date for this proposal is expected to be 1/31/11. NEI 09-14 requires that an Asset Management Plan be put in place for buried piping by 12/31/13. ENVY meets this EPRI recommendation, as long as the proposed action is completed as planned.

Tanks

EPRI 1016456 does not apply to buried tanks. Nonetheless, Entergy has made its program applicable to tanks as well as piping. This is reasonable since the degradation mechanisms and consequences of failure are similar between buried pipes and buried tanks. A check of the BPTIP population verified that ENVY is including buried tanks in its BPTIP. TK-AUTO-DIESEL, TK-

AUTO-GAS, TK-DG-3-1A, and PSB Diesel Fuel Tank are on the list and are risk ranked according to CEP-BPT-0100. The SR Assessment Team reviewed the program document EN-DC-343, Revision 2 and found that it adequately addresses tanks in addition to piping. No opportunistic or programmatically driven inspections of buried tanks have been performed by ENVY yet.

2.7 Corrective Actions

Once an anomaly is found relating to buried piping, a Condition Report (CR) is written. This CR is then reviewed by the BPTIP owner. A horizontal assessment of the corrective action program as it pertains to the BPTIP was performed. The methodology for this horizontal assessment of corrective actions associated with the BPTIP was similar to that conducted for the vertical assessment of the AOG system, and included:

- Review of selected procedures.
- Review of selected documents and drawings.
- Interviews with selected personnel.
- Attended a presentation on the BPTIP system by an Entergy Chief Engineer and the ENVY BPTIP System Engineer.
- Multiple, independent "key-word" searches of the Paperless Condition Reporting System (PCRS) and the Merlin electronic records management system databases to identify BPTIP related issues.
- Review of the Corrective Action Plan for development of the BPTIP.
- Review of selected Condition Reports (CRs) associated with the BPTIP.
- Review of selected NRC inspection reports.
- Review of selected QA reports.
- Review of selected Self Assessments.
- Review of selected Operating Experience.

<u>Assessment Response for BPTIP</u>

As part of the BPTIP assessment, the SR Assessment Team conducted independent "key-word" searches of the corrective action databases. These searches used key-words, such as: 'Buried', 'Underground', 'Pipe Wall', 'Tank', etc. to identify CRs and other issues related to the BPTIP. These searches determined that there were a relatively low number of CRs for the BPTIP area. The lower number of CRs was attributed to several factors, including: inspections for buried pipes and tanks were usually performed as "opportunistic" inspections (i.e. when pipes or tanks are exposed for specific repairs/modification or inadvertently exposed during other work activities) with few "focused" inspections; a low number of visible problems in this area; and, slow industry-wide recognition of the importance of a buried piping and tank program.

The SR Assessment Team review of selected CRs determined that ENVY recognized some buried piping and tank program shortcomings as early as 2006, when the following CRs were initiated: CR-VTY-2006-02377 which identified that there was no technically knowledgeable department providing oversight or ownership of the underground storage tanks at ENVY; and, CR-VTY-2006-03128 which identified that ENVY does not have a program or process to inspect, monitor or trend corrosion in buried piping. This last CR also referenced a corporate assessment VTYLO-2006-00107 which was conducted in the summer of 2006 and concluded that there was a lack of a buried pipe monitoring program. The SR Assessment Team determined that these concerns have been adequately addressed by ENVY. The development of a buried pipe and tank program and the assignment of a program owner are discussed in detail earlier in this section.

Corrective Action Effectiveness for BPTIP

Entergy Corporate initiated CR-HQLO-2008-00015 on 2/2/08. This CR contains the 'Implementation and Lessons Learned for Buried Piping' and details the need for the fleet-wide development of a program to address inspection of buried piping and tanks. The SR Assessment Team review of the corrective action plan identified that it currently consists of 319 Corrective Actions (CAs) steps spread across all of Entergy's stations, including ENVY. Spot checking of a limited number of action items by SR Assessment Team determined that none were overdue, but that many had due dates well into the future, 2012 and beyond in some cases. Several selected closed CAs were verified to have effective corrective actions documented in the CA. Senior management involvement was also evident as an Entergy Chief Engineer is leading this initiative.

2.8 BPTIP Summary Conclusions

When fully implemented, the ENVY BPTIP will not represent a challenge to plant reliability for the period of extended operation. The BPTIP is designed to provide reasonable assurance that the structural integrity of buried piping remains intact for the life of the plant. Additionally if a leak in buried piping does occur, the program is designed to facilitate emergent repairs, and also enables plant personnel to implement planned repairs for buried piping in a timely manner.

The ENVY BPTIP is currently in the development and implementation phase so there is a great deal of work yet to be accomplished. It is noteworthy that there is significant corporate involvement in the industry BPTIP initiative which should provide benefit to ENVY. Based on the document reviews, interviews and the information presented in this section of the report, the state of the implementation of the ENVY Buried Piping and Tank Inspection Program meets current industry standards.

This conclusion is based on a comparison of the BPTIP procedures to the industry accepted procedures, including a list of 27 specific program recommendations contained in EPRI document 1016456, Recommendations for an Effective Program to Control the Degradation of Buried Pipe, dated December 2008. The SR Assessment Team review concluded that ENVY is appropriately implementing its program in accordance with the established procedures.

The following watch areas were noted during the assessment:

- ENVY should make more effective use of the Change Management Process with respect to the BPTIP implementation.
- Because there is a substantial portion of the BPTIP implementation yet to be completed, ENVY implementation and oversight of the program should be considered a watch area until fully implemented.
- Implementation of the BPTIP should be monitored to ensure it is completed in accordance with the NEI schedule and the EPRI recommendations. Implementation should include as a minimum: (1) refine the Risk Ranking through the use of scheduled and opportunistic inspections, soil analyses, and coating assessments, (2) make the buried piping database more useful and effective by breaking longer pipe runs into more discrete segments, and (3) assure better control of the program database by migrating the program population to the fleet standard IDDEAL software tool or equivalent.

2.9 References

Procedures

1. Entergy Procedure – EN-DC-343 Rev 2, Buried Piping and Tanks Inspection and Monitoring Program
2. Entergy Corporate Procedure – CEP-BPT-0100, Rev 0, Buried Piping and Tanks Inspection and Monitoring
3. Entergy Engineering Standard – EN-EP-S-002-MULTI, Rev 0, Buried Piping and Tanks General Visual Inspection
4. Entergy Procedure – EN-DC-174, Engineering Programs
5. CEP-COS-0100, Control And Use Of IDDEAL Concepts Software

Documents

1. EPRI document 1016456, Recommendations for an Effective Program to Control the Degradation of Buried Pipe, December 2008.
2. NEI 09-14, Guideline for the Management of Buried Piping Integrity, 2/4/10.
3. NRC Policy Issue, SECY-09-174, “Staff Progress in Evaluation of Buried Piping at Nuclear Reactor Facilities,” 12/2/09.
4. NRC Liquid Radioactive Release Lessons Learned Task Force Final Report, 9/1/06.
5. NEI 07-07, Industry Groundwater Protection Initiative, August 2007.

6. NRC Information Notice 2006-13: Groundwater Contamination due to Undetected Leakage of Radioactive Water, 7/10/06.
7. EPRI News Article, What Lies Beneath: Finding Solutions to Buried Piping Problems, Summer 2009.
8. NRC Inspection Manual, Inspection Procedure 62002, Inspection of Structures, Passive Components, and Civil Engineering Features at Nuclear Power Plants, 12/31/96
9. NUREG/CR-6876, Risk-Informed Assessment of Degraded Buried Piping Systems in Nuclear Power Plants, June 2005.
10. VDPS letter, Docket 7440 – Act 189 buried pipe issue, dated 1/14/10.
11. NRC NUREG-1801 Generic Aging Lessons Learned (GALL) Report
12. SECY-09-174, Staff Progress in Evaluation of Buried Piping at Nuclear Reactor Facilities, 12/2/09

Drawings

1. A-13019, Yard Piping – Underground Plans & Sections Off-Gas Modification
2. G-191162 Sh.3, Flow Diagram Miscellaneous Systems Exhaust Stack & Off-Gas
3. G-191190, Off-Gas Piping – Turbine Building
4. MD-49698-600, AOG Drain Line 2”-CNPE-172A
5. G-191191, Off-Gas Piping Yard
6. 33600-A-201, Engineer Flow Diagram Lead Sheet Off-Gas Modification
7. A-13010, Piping Arrgt. Trench - AOG BLDG – Plans & Sects
8. A-13011, Underground Piping AOG Bldg Off-Gas Modification
9. A-13013, Plans & Dets – Trench Piping Existing Turbine Building Off-Gas Modification
10. A-13020, Sh. 1&2, Yard Piping Details Plan & Sections Off-Gas Modification AOG System Bypass Tie-Ins
11. VY-E-75-001, Flow Diagram AOG
12. 1888P02, Hydrogen Storage Site Plan & Underground Utilities
13. 5920-FS-307, Sh. 4, Composite Underground South – Section IV
14. 5920-12894, Sh. 15, Hydrogen Storage Site Plan, Underground Utilities in South Warehouse Area
15. 1888P, Sh. 3, Hydrogen Line Plan and Profile 8 Underground Utilities
16. PI 70500-101,Sh. 2, 3 & 4, Potable Water 3” Copper Line
17. 5920-11827, Sh. 1, House Heating Boilers Fuel Oil Storage System Miscellaneous Details
18. 5920-8743, Plumbing System Warehouse Addition to Turbine Building

19. 5920-11178, Gas Tank Piping and Details
20. G-191176, Sh. 1, Flow Diagram Condensate & Demineralized Water Transfer System
21. G-191238, HVAC-Flow Diagram Reactor Building
22. G-191230, Sh. 1, Site Yard Piping Plan
23. G-191231, Sh. 2, Yard Piping Plan
24. G-191232, Yard Piping Sections and Details
25. G-191443, Site Plan Grading & Drainage
26. G-191194, Sh. 1, Reactor Building Service & Cooling Water Piping – Plans
27. G-191245, HVAC Radwaste Building
28. G-191668, Sh. 1, Reactor Building-Plans & Details Plumbing & Drainage
29. G-191662, Sh. 1, Turbine Building Ground Floor Plan Plumbing & Drainage
30. G-191227, Sh. 3, Radwaste Building Piping Plans
31. G-191204, Turbine Building – Miscellaneous Piping
32. G-191234, Make-up Water Treatment System Piping
33. G-191163, Sh. 1, Flow Diagram Fire Protection System-Inner loop
34. PI-70500-100, Northwest Well Project
35. G-191166, Flow Diagram Circulating Water & Assoc. Systems
36. G-191225, Sh. 1, Radwaste Building Piping Plans
37. G-191177, Sh. 1, Flow Diagram-Radwaste Systems
38. G-191163, Sh. 2, Flow Diagram Fire Protection System-Outer Loop
39. G-191200, Sh. 1 & 2, Turbine Building Service & Instrument Air Piping
40. G-191236, HVAC – Flow Diagram Radwaste Building
41. G-191222, Primary Containment – Atmospheric Control System Piping – Sections
42. VY-D-20-014, Sh. 1, 2,3 & 4, Main/North Sewage Disposal System Expansion
43. G-191672, Radwaste Building – Plans & Details Plumbing & Drainage
44. 5920-6141, Sh. 1, Start-up Transformers
45. G-191175, Sh. 2, Nitrogen Supply System Flow Diagram
46. G-191175, Sh. 1, Flow Diagram Primary Containment Atmos. Control System
47. G-191162, Sh. 2, Flow Diagram Miscellaneous Systems Fuel Oil
48. G-191160, Sh. 1, 2 & 3, Flow Diagram Instrument Air System
49. G-191160, Sh. 5, Flow Diagram Service Air System
50. 5920-FS-307, Sh. 1, Composite Underground West Section

51. G-191148, Sh. 1, General Arrangement Reactor Building Plans
52. G-191159, Sh. 1 & 2, Flow Diagram Service water System
53. 5920-11826, House Heating Boilers Fuel Oil Storage System Cathodic Protection
54. 5920-11178, Sh. 2, Underground Fuel Storage Leak Detection
55. HD-49882-302, Modified Type "E" Hanger
56. 5920-10800, Site Plan For Warehouse Sewage Disposal System
57. G-191665, Sh. 1, Turbine Building Riser Diagram Plumbing & Drainage
58. G-191446, Center Line Plan & Profile of Ventilation Pipe
59. G-191444, Manhole Schedule & Site Grading & Drainage Sections & Details
60. G-191221, Primary Containment – Atmospheric Control System Piping – Plan
61. 5920-FS-1210, Sh.1 & 2, Composite Dwg. of Cond. St. Tk. & Fuel Oil St. Tk. In Yard Area
62. 5920-13021, Sh. 1, Site Plan For Northwest Leach Field & Force Main From (C.O.B.) South Sewage Disposal System
63. 5920-12894, Sh. 5 & 6, (Utility Trench Construction)
64. 5920-12894, Sh. 13, P & ID H2 Control Panel Airgas
65. G-19148, Circulating Water System General Plan & Profile
66. 5920-FS-307, Sh. 2, Composite Underground North Section II
67. 5920-FS-307, Sh. 3, Composite Underground North Section III

3.0 Appendix 1 ENVY AOG Leak Event January 2010

The scope of the supplemental report at ENVY included the "Vertical Slice" assessment of the Advanced Off-Gas (AOG) system and a "Horizontal" assessment of the Buried Pipe and Tank Inspection Program (BPTIP) in accordance with Act 189. In January of 2010, a leakage event occurred that was directly associated with the AOG system and underground piping. As directed by the Vermont DPS in conjunction with the Public Oversight Panel, a detailed review of the leak event was performed as part of the supplemental report.

This Appendix includes an evaluation of the event. Information contained within this Appendix was used to support the evaluation of the AOG system, the BPTIP program, and conclusions and recommendations.

The information from the first three sections (Background, Description, and Investigation) of this Appendix was taken from the evaluation performed by ENVY contained in CR 2010-00069.

3.1 Background

Vermont Yankee nuclear station is located adjacent to the Connecticut River, on backfilled soil approximately 35-60 feet above bedrock. The local water table level fluctuates depending on the amount of precipitation, and it is affected by level changes in the Connecticut River. River flooding will cause a temporary reversal in the flow direction of groundwater, such that the local water table will be considerably higher than usual during periods when the river level is high. Natural subsurface drainage is over the rock surface.

In 1988 and 1989, groundwater monitoring wells were established throughout the site area. Groundwater levels varied between 5 feet to 18 feet below ground surface in the northern portion of the site. In the vicinity of the major plant structures, groundwater was determined to be about 20 feet below ground surface. Along the southern portion of the site, depth to groundwater was about 30 feet. Although these levels do vary throughout the year, they do provide a general indication of site area groundwater levels. Current groundwater monitoring requirements are specified by the Vermont Yankee Radiological and Non-Radiological Environmental Monitoring Programs and associated implementing procedures include the following:

1. Updated Final Safety Analysis (UFSAR) Summary Groundwater Information:
    - Section 2.4.2.3.2 Site Area (Hydrology), of the Vermont Yankee Nuclear Power Station UFSAR, Revision 22 provides a description of the site's hydrology.
2. Off-site Dose Calculation Manual (ODCM) – 1985 to present:
    - Groundwater analyses were incorporated into the new Radiological Effluent Monitoring Program (REMP) and Off-site Dose Calculation Manual (ODCM) with a requirement that on-site groundwater (potable deep) wells would be sampled on a quarterly basis and offsite indicator (Vernon Green Nursing Home) and off-site

control (Brattleboro Country Club, Skibniowsky and Copeland) wells would also be collected to provide comparative data. This sampling and analytical process has continued on a quarterly basis until the present time.

3. Nuclear Electric Institute (NEI) – Groundwater Protection Initiative (GPI) – 2006 to present:
   - In 2006, NEI adopted recommendations for installation of groundwater wells around nuclear plant sites and subsequent sampling and analysis of groundwater to provide early detection of contamination of groundwater through inadvertent release of plant-generated radionuclides to groundwater and other water effluent pathways. This was prompted by several industry events where radionuclides from operating nuclear power plant sites were discovered in groundwater both on plant sites and in the surrounding environs. NEI revised its recommendation in 2008 to incorporate lessons learned by the industry during the preceding two year period.
   - As part of the fleet-wide response to the NEI Groundwater Protection Initiative, ENVY voluntarily installed three wells (GZ-1, GZ-3, and GZ-5). These wells run north to south linearly just east of the protected area along the Connecticut River, and are spaced approximately 400 feet apart. GZ-1, GZ-3, and GZ-5 are the first three test wells of several that were recommended by professional hydro-geologists following their assessment of the Vermont Yankee plant site in 2006 and 2007 as part of a "Phase 1" effort to address the NEI-GPI.
   - GZ-1, GZ-3, and GZ-5 were installed and first sampled in the fourth quarter of 2007. They were sampled and analyzed quarterly between their installation date and the current event.
   - "Phase 2" consisted of a second tier of twenty additional wells. The installation date of this tier was moved up to accommodate this current leak investigation, beginning with GZ-6 located southeast of the Radwaste Trench.

3.2 Leak Event Description

CR-VTY- 2010-00069 states:

On January 6, 2010, Vermont Yankee (VY) was notified that the results of fourth quarter 2009 ground water sampling, performed as part of the voluntary ground water monitoring program, identified a very low concentration of tritium in one well that is used to monitor station ground water. VY notified state, local, and other government agencies of this condition. Since no other wells indicated the presence of tritium and the concentration detected was below the reporting threshold identified in the Off-site Dose Calculation Manual, notifications were considered voluntary consistent with NEI 07-07Industry Ground Water Initiative - Final Guidance Document. This report is being made in accordance with 10 CFR 50.72(b)(2)(xi) to notify the NRC of these voluntary notifications. There is no impact on public health and safety as a result of this event. The NRC Resident Inspector was also notified.

Initial event timeline per CR 2010-00069

Table 6: Event Timeline for CR 2010-00069

Date/Time	Event
1/6/10 1001	Notification was received from Teledyne Brown Engineering Environmental Services Lab (TBE-ESL) VY Project Manager in Knoxville this morning that our Groundwater Well sample from GZ-3, taken on November 17th, 2009, contained elevated concentration of Tritium (H-3). Detected levels were 705 pCi/L. No other gamma-emitting, plant-generated radionuclides were present in this or any other sample from the groundwater collection sent to Teledyne for the fourth quarter, 2009. Also, no other sample showed any evidence of elevated tritium concentration (any value above background).
1/6/10 1030	Normandeau Associates arrived on site to resample Groundwater Well GZ-3. A sample was forwarded to the Chemistry Lab for further analysis, and additional samples were collected, packaged, and shipped to TBE-ESL in Knoxville, TN for further analysis.
1/6/10 1900	The sample sent to the Vermont Yankee Chemistry Lab was analyzed and sample analysis results were completed and available at 1930 hours. Tritium levels were measured as; 16,800 pCi/L, 17,100 pCi/L, and 16,700 pCi/L. The sample was split in to three samples for greater accuracy. Gamma spectroscopy revealed no other plant generated radionuclides in the samples. The sample analysis results were verified by Chemistry supervision and the Chemistry Manager was notified of the results. Additional samples were planned to be collected and analyzed on 1/7/10.
1/7/10 0900	Normandeau Associates arrived on site to resample Groundwater Well GZ-3 and also to collect samples from GZ-1 and GZ-5. Samples were collected and forwarded to the VY Chemistry Lab for analysis. A sample of Connecticut River water, approximately 50 feet downstream of GZ-3 was collected and sent to the VY Chemistry Lab. Tritium from GZ-3 was measured as 14,500 pCi/L and GZ-1, GZ-5, and the river were less than detectable. Additionally a sample of water from Manhole-5, (located just North of the Containment Access Building and adjacent to the Reactor Building) was collected and analyzed for tritium and found to be less than detectable.

Table 6: Event Timeline for CR 2010-00069 (con't)

Date/Time	Event
1/7/10 1630	Communications were received from the TBE-ESL Program Manager that the Groundwater Well GZ-3 samples shipped to their lab on 1-6-10 were analyzed and the results were measured as: 14a100 pCi/L, 12,700 pCi/L, 15,400 pCi/L, and 15,500 pCi/L. The sample was split in to four samples for greater accuracy. These values generally agree with the Vermont Yankee Chemistry Lab analysis of GZ-3 sample from 1/6/10.

3.3 Leak Investigation and Management Actions

A multi-disciplinary team was established to investigate the leakage source and formulate a root cause evaluation. Team members from Chemistry, Operations, Design Engineering, Systems Engineering, Programs Engineering, Environmental Services, and Licensing were selected. The team also included a member from the Communications Department. The Root Cause Analysis investigation team developed a broad approach. In 2005, ENVY had reviewed all plant systems to proactively determine which characteristics might result in a release of tritium to the environment. The results of the 2005 tritium release study were reviewed and ranked as to the probability of identifying the source of the current tritium release. The team then performed a walk-down of the site to observe accessible potential release locations. Based upon the relative probability of potential release, locations were separated into a group for immediate investigation and a group for subsequent investigation, if required. An action plan was developed laying out a sequence of steps to investigate the immediate investigation group.

3.3.1 Sources Investigated by the ENVY Team

The information in this section was taken from CR 2010-00069 and supplemented by information gained from interviews with the Tritium Leak Investigation Team and from updates provided on the ENVY website. The Root Cause Team has identified the following possible sources of the leak. Each is discussed separately.

- Condensate Storage Tank.
- AOG Drain Pit.
- AOG Ground Surface Subsidence.
- AOG Bypass Valve Vaults.
- CST Pipe Trench.
- Conduit Access Manholes/Handholes.
- Radwaste Pipe Trench.
- AOG Pipe Trench.

- Stack Sump.
- Impact of Spent Fuel Storage Transport on Buried Pipe.
- Miscellaneous Buried Piping.
- Configuration Control.
- Sabotage.

Condensate Storage Tank

The Condensate Storage Tank is filled with a large volume of tritiated water and is therefore a potential source of the leak. There is a known condition where water (from rain, melting snow, or melting ice from the vent) enters cracks in the insulation on the tank and piping. This is the source of intermittent leakage observed from the CST tell-tale drain. Condition Report CR-VTY-2009-4469 addresses this issue. On several occasions (including during this investigation) samples from the tell-tale drain were collected and analyzed. Although tritium was present, the sample properties were not consistent with a CST leak.

A review of inventory trends from the Make-up Demineralizer System, CST foundation evaluation, CST inspection video, and trends from the CST tell-tale drain leakage were performed by the ENVY investigation team. The results of this review did not indicate CST was the source of the tritium contamination in GZ-3.

AOG Drain Pit

The AOG Drain Pit was inspected and found not to contain any leaking structures systems or components.

AOG Ground Surface Subsidence

The site walk-down identified an area of interest between the AOG Building and the Turbine Building. In this area instances of ground subsidence (sink holes) have occurred since July 2008. The ground subsidence has been occurring in close proximity to the location of an AOG System condensate drain line, 2”CNPE-172A. The drain line, which is encased in reinforced concrete, contains mixed flow regime, including tritiated water.

In response to a Condition Report on the ground subsidence, the area above 2”CNPE-172A had been inspected by Ground Penetrating Radar (GPR). While the GPR data is not conclusive, it indicated that at a level 5½’ to 6’ below the surface the soil may be saturated with water and the depth to the water saturated area increased very quickly as the distance to 2”CNPE-172A increased. Hydraulic excavation of the area of interest began on Monday, 1/25/10, and was ultimately determined to be the source of the leakage.

AOG Bypass Valve Vaults

The north and south AOG By-Pass Valve Vaults were both opened and found to contain standing water. No detectable tritium was found in either of the valve vaults.

CST Pipe Trench

The CST Pipe trench was inspected. No leaking structures, systems, or components were found. Additional inspections were performed per the tritium investigation Action Plan during the HPCI surveillance (February 2010) with the system in operation.

Conduit Access Manholes/Handholes

Four underground electrical access manholes/handholes previously identified as containing water were opened and the water was sampled. Two manholes/handholes are near the AOG Building (HH-32-SII, and HH-32-SI), one near the Radwaste Trench (MM-OG1), and one near GZ-3 (HH-L10). No detectable tritium was found in any of the underground electrical access manholes/handholes.

Radwaste Pipe Trench

The Radwaste (RDW) System Pipe Trench was included on the list of areas for immediate investigation. The RDW Pipe Trench contains the RDW System process lines connecting the external system holding tanks to the processing equipment within the RDW Building. It is accessible, but infrequently entered because there are no operator actions required in this area. An inspection of the trench found a volume of water in part of the trench at a maximum depth of 1½" (approximately 150 gallons). The water contained approximately 2,000,000 pCi/L of tritium. CR-VTY-2010-00145 was initiated. The water was removed. Four days later the trench was again inspected. Approximately 60 gallons of water was found and removed. The water had a tritium concentration of approximately 720,000 pCi/L. Further investigation determined that the most probable source of the water was condensation from the nearby Waste Collector Tank (WCT). The access area in the wall between the WCT and the RDW Pipe Trench was blocked with herculite. Herculite is a waterproof plastic material.

This prevented air from the WCT room from reaching the trench. After this herculite barrier was installed, no more water was found in the trench. Monitoring well GZ-6 was installed just east of the Radwaste Pipe Trench, and shows no indication of tritium contamination.

AOG Pipe Trench

The AOG Pipe Trench carries the process lines between the Turbine Building and the AOG Building. Many of these lines contain water or steam with high concentrations of tritium. The floor drain in the trench drains to the sump in the AOG Drain Pit. Most large sumps at ENVY have a run-timer on the sump pump motor. This allows plant personnel to monitor and trend the amount of leakage being collected by the sump. The AOG Sump Pump (P-157-1A) originally

did not have a run-timer. During normal operation, it is expected that the AOG Sump Pump should operate infrequently, if at all. To determine if a leak is occurring within the pipe trench, a temporary device was connected to the AOG Sump Pump to record its frequency and duration of operation. This temporary device determined that a leak of approximately 100 gallons per day existed in the tunnel. Initially, the leak source in the tunnel was masked by the fact that the tunnel drain was blocked by construction debris. Leakage was collecting in the tunnel and flowing out the tunnel at the 2"CNPE-172A penetration.

Stack Sump

The water in the Stack Sump contains a high concentration of tritium. Based on historic data, the Stack Sump Pumps (P-56-1A (B)) operate very infrequently. The operation of the stack sump pumps was monitored as part of this investigation to verify that no leak sources existed in the sump. This sump is normally monitored on a periodic frequency by Operations.

Impact of Spent Fuel Storage Transport on Buried Pipe

Buried pipes can be impacted by heavy loads traveling on the roads above them. ENVY has buried pipes below the transportation pathway of the spent fuel casks. Calculation VYC-2366 indicated the Vertical Cask Transporter (VCT) would not impact buried underground piping during movement of dry fuel storage casks. The leak investigation team performed an independent review of the calculation to ensure that all underground pipes potentially affected by travel of the VCT were addressed. Additionally, design engineering checked the pipe data in the calculation for correctness, i.e. pipe diameter, pipe depth, and material. They also reviewed the methodology to make sure that it was valid and accounted for all possible loads, such as soil overburden, and that any assumptions used were either verified or conservative. Based on review of the calculation it was determined that it was not likely that the VCT was a cause or a contributing cause to the source of the tritium in GZ-3.

Miscellaneous Buried Piping

Miscellaneous buried piping was evaluated for leakage potential and probability. The use of guided wave technology was evaluated and used where feasible. Visual inspections were the primary method of inspections.

Configuration Control

Plant misalignment (i.e. a valve put in the wrong position) is a possible source of tritium to the groundwater. A piece of plant equipment out of position would typically be accompanied by a discernable plant response or some other visible indication. Since no unexpected plant responses had been received, plant misalignment was not believed to be a possible source of the tritium in GZ-3.

Sabotage

The possibility of sabotage of GZ-3 was discussed by the team and deemed an unlikely scenario. The well is located directly under a security tower and is therefore under constant observation. It was buried under snow and a metal detector was required to find the well under the snow cover. The potential for sabotage of the individual samples was also considered. Several independent samples were taken and analyzed, ruling out sabotage as a potential source.

3.3.2 Leak Investigation Strategy (from CR2010-00069)

Each possible source of tritium was investigated on two levels: 1) a source-specific level; and, 2) a site-specific level. The source-specific approach focused on the plausible failure modes and damage mechanisms for that source. The site-specific approach was based on understanding the site hydrology and using all available and appropriate sampling point opportunities to understand where the tritium was located and how it is moving.

The investigation strategy consisted of working in four strategic areas:

- How will tritium move on-site, if a Structure System or Component (SSC) leaks?
- Where does ENVY have tritium in the ground?
- What is/are the likely source(s) of tritium that could contaminate the ground?
- How will ENVY take action to appropriately terminate (correct), remediate, and monitor this situation in the future?

3.3.3 Strategy Implementation (from CR 2010-00069)

To determine how tritium moves underground at ENVY, plant staff contracted GZA Geoenvironmental, Inc. to characterize the hydrology of the site and provide general consultations on groundwater issues. A detailed site conceptual model was developed. As mentioned previously, GZA had performed the initial tritium studies for ENVY. Ten Phase II monitoring wells were installed. These Phase II wells were sampled and analyzed. With GZA's assistance, additional wells were planned and installed to fine tune the site's hydrology and determine the extent of the tritium plume. All of these wells will be available to assist with future leaks. This will greatly shorten the response time required for future leak investigations. By the end of the current investigation, more than 20 monitoring wells had been installed and sampled at ENVY. As a result of this current event, ENVY now has a groundwater monitoring ability that exceeds industry standards.

Sample results were obtained daily. Figure 2 shows the locations of all the monitoring wells and the calculated tritium plume as of 4/7/10.

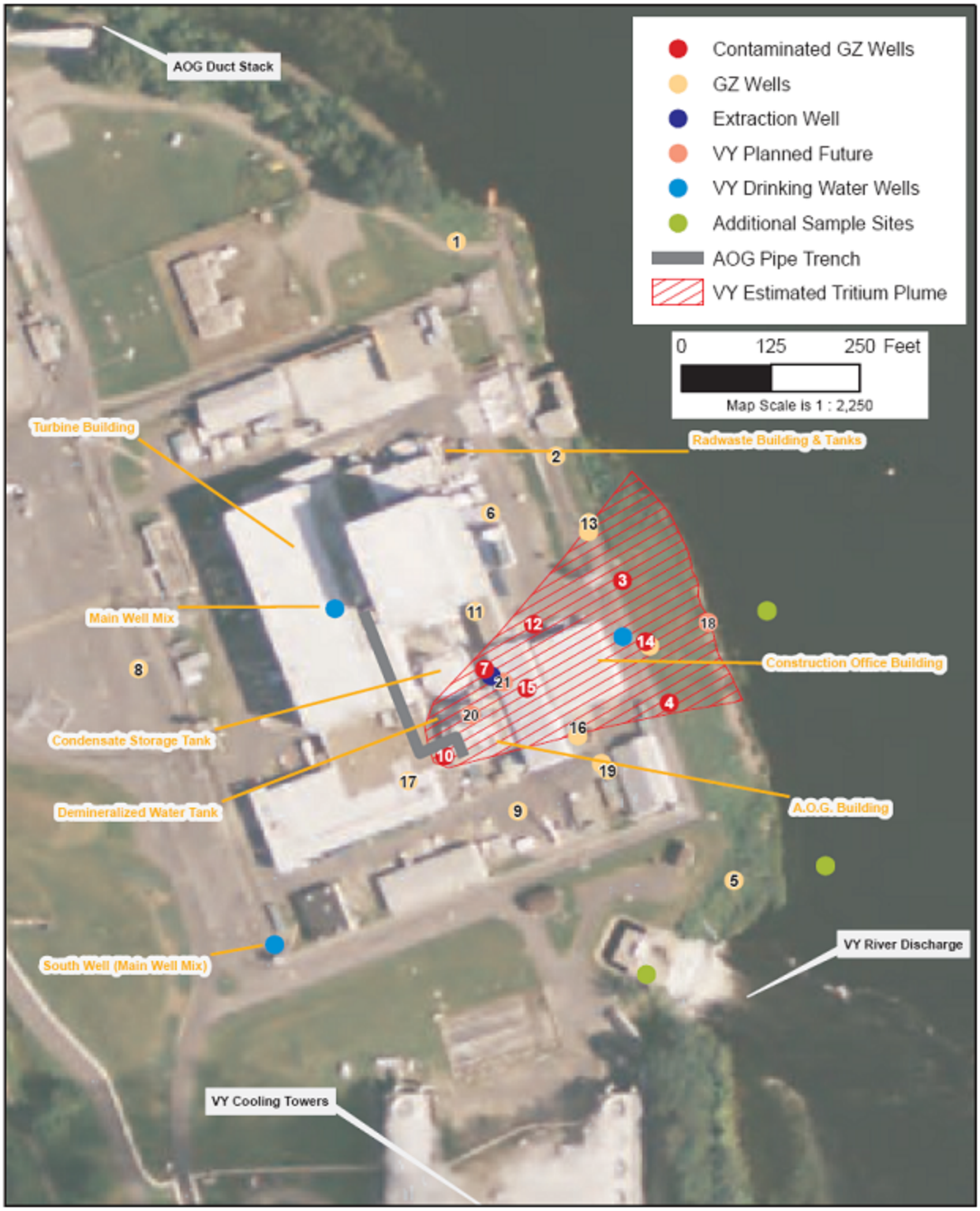

Figure 2: Location of Monitoring Wells and Tritium Plume

The site-wide sample results were factored into the source investigation. Potential leak sources were reprioritized based on sample results from nearby wells and the site conceptual model. The site conceptual model provided groundwater flow paths and flow rates.

Also, plant process data was used to assist in finding the leak source. The ENVY investigation team used a detailed process of troubleshooting to find the leak source. The troubleshooting plan looked at all possible failure modes and leakage sources. Figure 3 is the chart that represents the basic troubleshooting approach which was used.

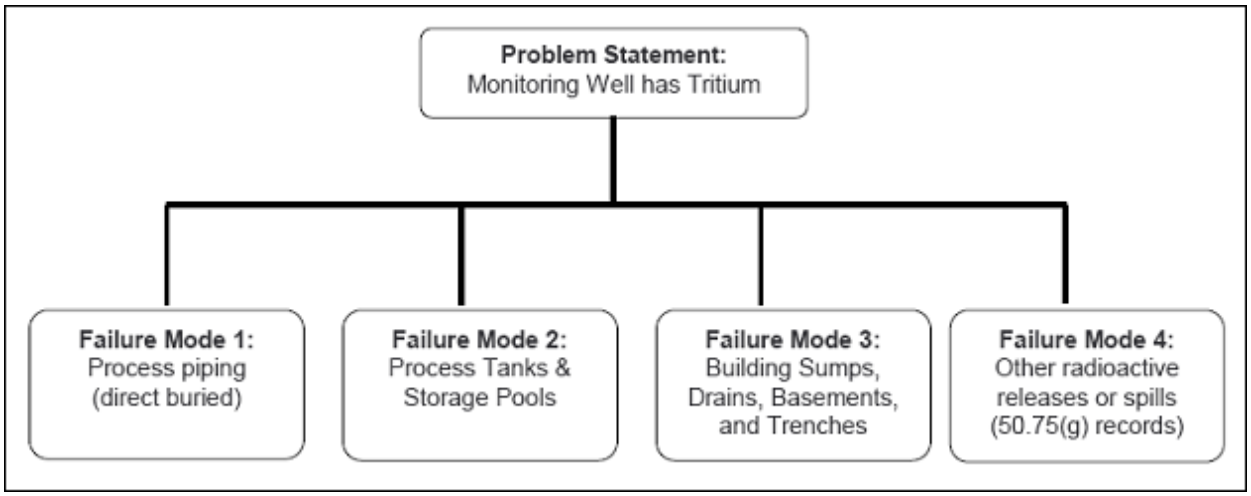

Figure 3: Chart of Basic Troubleshooting Approach

Each potential source from each listed failure mode was put in to the troubleshooting plan. A description of each source, the potentially affected groundwater monitoring well, and a method to confirm the source as the leak source was listed in a table. The troubleshooting table contained more than 70 potential sources to test. The test method for each source was determined individually by the team. A wide variety of tests and methods were noted. The pipe leaks were found by visual inspection using a remotely operated camera. The tunnel leak was found using an inventory test with clean water. All potential leak sources were evaluated, even after the first leak source was found by the team on 2/14/10. This is notable, because a second leak source was found by the team on 3/5/10.

Once the leak source was found, it was isolated. A temporary modification was performed, and a permanent modification is being designed by engineering.

The ENVY troubleshooting plan and leak investigation strategy were reviewed and found to be consistent with industry standards.

3.3.4 Investigation Results

Later Timeline - Data gathered from Tritium Updates provided by ENVY Team

Early troubleshooting eliminated several potential sources. Installation and monitoring from additional wells helped focus the investigation. A central "command center" was established for the investigation team. Project management and management oversight was established by ENVY. Table 7 shows several highlighted events recorded in 2010.

Table 7: Subsequent Events Timeline (Highlights)

Date	Event
1/25/10	Based on ground subsidence, excavation of the AOG drain line was commenced. This excavation became the main focus of the leak investigation and is described in greater detail in the section titled Leak Inspection and Repair.
2/01/10	GZ-3 exceeded the NRC's reporting limit of 30,000 pCi/L.
2/04/10	Section of the AOG tunnel inspected with borescope. No water was found. This was only a partial inspection of the part of the tunnel that could be reached at this time.
2/08/10	GZ-10 installed in the vicinity of the AOG tunnel. Tritium measured to be 2,400,000 pCi/L.
2/09/10	Rover sent in to one section of the AOG tunnel. No leak was found. This was another limited partial inspection. Work continued to gain access to the rest of the tunnel.
2/10/10	During scheduled recombiner swap, wisps of steam noted coming from AOG tunnel entrance in a recombiner room.
2/11/10	Investigation transitioned to around-the-clock work.
2/16/10	Over the weekend (2/13 – 2/14), standing tritiated water was found in the AOG pipe tunnel using borescope and conduit. Suspected source was stated as "B" AOG recombiner steam trap drain line. The steam trap drain line was isolated and flow in to tunnel was visually verified to stop using the borescope. Because of the presence of the standing water, the tunnel floor drain was suspected to be clogged. Workers cleared the drain and the standing water drained from the tunnel.
2/19/10	Borescope inspections and AOG drain pit sump monitoring reveal that some leakage is still occurring in the AOG tunnel, even with the "B" recombiner drain line isolated.

Table 7: Subsequent Events Timeline (Highlights) (con't)

Date	Event
3/01/10	Excavation of tunnel completed in the area where 2"CNPE-172A penetrates the concrete tunnel. A leak path from the tunnel to the soil was visually verified by conducting a test involving clean water.
3/03/10	Catch basin installed around AOG tunnel to prevent any leakage from the discovered gap in the tunnel where 2"CNPE-172A penetrates tunnel.
3/05/10	Rover inserted into tunnel from CNPE-172A penetration. Rover finds dime sized hole at an elbow in the "A" drain line inside the tunnel. CR 2010-00953 was written.
3/6/10 through 3/18/10	The "A" and "B" recombiner steam trap drain lines will be rerouted temporarily to eliminate the leakage in to the AOG tunnel. A more permanent repair is planned for the upcoming refueling outage. Several other corrective actions are being considered, including rerouting other susceptible pipelines, upgrading pipe materials, installing performance monitoring in the AOG tunnel and on the AOG drain pit sump, and a more extensive cleaning of the tunnel drain line.
3/18/10	"B" drain line rerouted to stop leak.
3/23/10	"A" drain line isolation test performed. Leak verified on "A" drain line.
4/2/10	"A" drain line rerouted to stop leak.

The event timelines and the major decisions that were made between 1/6/10 and 4/5/10 were reviewed. The response to this event was appropriate, well planned and well executed. However, it should be noted that the SR Assessment Team found five CRs containing prior observations of ground subsidence in the vicinity of the AOG leaks between 7/08 and 4/10. A review of the CRs indicates that they had been closed with a minimal amount of investigation. These CRs could represent missed opportunities to possibly discover the AOG leakage sooner.

3.4 ENVY Leak Detection and Monitoring Methods

This segment of the report provides an overview of leak detection and monitoring methods used at ENVY. Additionally, these methods will be reviewed with respect to their applicability to the identification of the AOG drain line leaks. For a detailed description of the AOG leak investigation refer to the above sections of this Appendix concerning "Leak Investigation".

An integral part of nuclear plant operations is the identification and repair of system leakage. For this report the working definition of a leak is the unexpected loss of a fluid or gas from a system inventory. This segment of the report will focus only on water and steam leak detection because this is the primary potential source of tritium to the environment.

The ENVY plant utilizes various processes to identify system leakage. The primary method of leak identification is the visual/audible detection by personnel in the plant. Operations personnel perform thorough inspections of plant equipment in accessible areas during operator rounds, which are performed each shift. One of the many tasks performed during the performance of rounds by the operators is leak identification. High radiation areas are patrolled less frequently to minimize radiation exposure. Remote cameras are used to supplement the monitoring in selected inaccessible and high radiation areas. These cameras are used by operations to monitor plant equipment, to take required readings, and to identify and monitor equipment leaks. The use of additional cameras to enhance monitoring capabilities should be considered as part of the AOG leak event CR evaluation and associated corrective action plan.

ENVY procedure EN-OP-115, Conduct of Operations, has established the following expectations for operators performing plant rounds which are applicable to the identification of leaks:

- Use all applicable senses while on tour to identify abnormal conditions.
- Identify unusual or unexpected situations or conditions which warrant additional attention or corrective actions.
- Report indications of changing equipment conditions so that degrading performance can be investigated and corrected.

ENVY procedure OP 150, Conduct of Operations and Operator Rounds, has established the following requirements for the review of operator rounds by the Control Room Supervisor/Shift Manager:

- Ensure that a Work Request is generated for any conditions which are no longer in an allowable condition.
- Determine if any compensatory actions should be performed.
- Determine if a Condition Report should be initiated.

System engineers also perform thorough periodic system walk-downs. During a system walk-down the engineers are expected to identify system leaks. It should be noted that all plant personnel are expected to enter any identified plant deficiencies, such as system leaks, into the work control system for evaluation and repair. Ground subsidence issues are indicators of potential underground leaks. These issues are expected to be identified and entered into the corrective action system for evaluation.

The location of the AOG recombiner steam trap drain line leaks is inaccessible to plant personnel because it is located in an underground pipe tunnel; therefore, direct visual detection was not a viable method of detection. However, during the leak investigation a small wisp of steam was identified coming through a floor penetration in a recombiner room which assisted in the identification of the leak in the B recombiner drain line.

A second method of leak identification is detection by monitoring major plant water inventories for anomalous inventory changes. ENVY is an administratively controlled zero discharge plant which means that no water is released from the plant via the Radwaste System. Make-up water to the plant is supplied from the Demineralized Water Storage Tank (DWST); therefore, the total plant water consumption is equal to the total amount of demineralized water that is used. Nominal DWST daily water usage is ~2,000 gpd during non-heating season and ~4,000 gpd during heating season. The DWST supplies water to the Condensate Storage Tank (CST) and the house heating steam system storage tank. Operators take daily readings to determine DWST and CST inventories. The Chemistry department utilizes this information to establish nominal water usage rates. If a significant unexplained deviation from the nominal water usage rates is identified, that would indicate a potential inventory loss, then an investigation would be initiated to determine the reason for the deviation. This leak identification method is an established work practice rather than a procedurally required activity.

In addition to the above water inventory monitoring methods, system make-up quantities are monitored to aid in leak detection. This is a formal process controlled by an operating procedure. During the weekly performance of operating procedure OP 4152 Equipment and Floor Drain Sump and Totalizer Surveillance the quantity of make-up water to the Reactor Building Closed Cooling Water System (RBCCW), the Turbine Building Closed Cooling Water System (TBCCW), and the Spent Fuel Pool System are recorded and evaluated. The procedure directs the operators to generate a CR triggered by specified unexplained differences in makeup to: 1) RBCCW of greater than 100 gallons per week; and, 2) TBCCW of greater than 20 gallons per week; or, 3) Spent Fuel Pool of greater than 5,000 gallons per week. These systems are not directly related to the AOG leaks, but are included as additional examples of water inventory monitoring. Additional enhancements to the plant water inventory monitoring program should be considered as part of the AOG leak event CR evaluation and associated corrective action plan.

The AOG recombiner steam trap drain line leaks would not be identifiable by the water inventory monitoring method.

A third method of leak identification is the monitoring of various plant sumps. Plant sumps are designed to collect water from the designed outputs of plant systems and effluent from plant leaks that are transferred to and processed through the Radwaste System. Significant unexplained deviations in the amount of water flow into plant sumps may be indicative of a system leak. Because of this, the plant has developed a monitoring program to assist in identifying plant leakage. For those systems that have installed monitoring instrumentation, ENVY has a procedure OP 4152, Equipment and Floor Drain Sump and Totalizer Surveillance that is performed weekly to collect relevant monitoring data. The following area sumps (total of 12 sumps) are included in this surveillance:

- Reactor Building sumps (4)
- Turbine Building sumps (4)
- Radwaste Building sumps (2)
- Condensate Storage Tank sump (1)
- Off-gas Stack sump (1)

The procedure provides to operators the following guidance for when action is required: 1) for excessive sump run-times as indicated by a delta run-time greater than 3 hours per week (3 hours/week is equal to approximately 1 gpm in-leakage) which cannot be explained, a CR is to be initiated; and, 2) for run-times greater than 3 hours per week that can be explained, a reason is to be provided in the "Notes Section" of the procedure.

The AOG Drain Tank Sump is currently monitored by means of a temporarily installed sump pump run-timer. There are a number of sumps that do not have sump pump timers to monitor run-times. Potential enhancements to the sump monitoring capabilities should be evaluated as part of the AOG leak investigation and development of associated corrective actions. With respect to the potential of sump monitoring to detect the AOG recombiner drain line leaks the following information should be noted:

- The leaks were located in an inaccessible pipe tunnel.
- The pipe tunnel was designed with the capability to collect and drain system leakage through a drain to the AOG Drain Tank Room Sump.
- The drain from the pipe tunnel to the sump was found clogged with debris during the leak investigation. The debris has subsequently been cleared from the drain line.
- If the drain line had functioned as designed, the AOG leakage would have been collected in the AOG sump and then transferred to the Radwaste System for processing instead of leaking into the ground.
- The AOG Drain Tank Room Sump was not designed with a sump pump run-timer so in-leakage rates could not be determined. Subsequently a temporary sump pump run-timer to monitor in-leakage has been installed.

Sump monitoring was not a viable method to detect the AOG leakage in the pipe tunnel for two reasons: 1) the pipe tunnel drain was clogged with debris; and, 2) there was no installed AOG Drain Tank Room Sump run-timer to facilitate the monitoring of in-leakage. It should be noted that the sump has a high level alarm. This alarm would actuate due to significant sump in-leakage rates or a malfunctioning sump pump.

The final leak detection barrier to prevent radioactive contaminants from entering the drinking water supply or the Connecticut River is the groundwater monitoring program. Current groundwater monitoring requirements are specified by the Vermont Yankee Radiological and Non-Radiological Environmental Monitoring Programs. Associated implementing procedures are listed in the "Background" section of Appendix 1.

The first wells to detect groundwater for contaminants (GZ-1, GZ-3, and GZ-5) were installed and first sampled in the fourth quarter of 2007. They have been sampled and analyzed quarterly between their installation date and the current AOG leak event. "Phase 2" added a second set of twenty monitoring wells. The installation of the wells was initiated to facilitate the current leak investigation, beginning with GZ-6 located southeast of the Radwaste Trench. The additional wells have significantly reduced the identification time of potential leaks into the groundwater. Additional enhancements to the groundwater monitoring program should be considered as part of the AOG leak event CR evaluation and associated corrective action plan.

With respect to the AOG leak, the groundwater monitoring program did identify the leak. However, groundwater monitoring is the last line of detection for radioactive contaminants before potentially entering the Connecticut River. This situation highlights the need to strengthen or create associated leak prevention and detection barriers.

ENVY needs to improve the capability for timely detection of potentially contaminated water before it enters the groundwater. As part of the AOG leak CR an evaluation of the leak detection barriers should be performed and associated corrective actions developed.

3.5 Leak Inspection and Repair

3.5.1 Contractor Oversight of Repair Activities

The excavation work is being done under ENVY supervision utilizing a number of contractors. The following is a list of the primary contractors utilized by ENVY and the services they are providing:

1. RCM – Planning and engineering
2. Shaw Group – Craft labor and supervision, pipe fitters, laborers, carpenters.
3. Beck Engineering – Original shoring design
4. Mabey Bridge & Shore – Final shoring design
5. Williams Group – Project coordinator
6. Guidant – Project manager
7. J N Giammarino Construction – Excavation technicians
8. Badger Daylighting Inc. – Hydrovac excavation

There are a few other secondary contractors providing minor services that are not listed above.

In the 2008 CRA Report, lack of contractor oversight was identified as an issue. Specifically the issues identified were lack of drawings, inadequate Work Orders, insufficient oversight, and over reliance on the skill of the craft labor. The excavation to locate the AOG leak is in an area that

contains a safety-related duct bank and safety-related diesel generator fuel oil lines. Because this excavation is in an area that could potentially impact safety-related equipment, this assessment also reviewed contractor oversight as it pertains to the excavation to locate the AOG leak.

At ENVY contractor oversight is provided by two organizations, Engineering and Maintenance. Maintenance controls the craft labor performing the excavation and Engineering provides input to the Work Order relative to shoring design and backfilling requirements, etc. ENVY procedure EN-MA-126, Control of Supplemental Resources, governs the requirements for contractor oversight. This assessment included a review of contractor oversight as it pertains to both of these organizations.

Engineering utilized contractors to design the shoring for the excavation and to perform other supporting calculations. EN-DC-149, Revision 4, Acceptance of Vendor Documents, controls the processing and acceptance of vendor design documents. EN-DC-126, Engineering Calculation Process, governs the preparation, revision, review, approval and use of vendor documents. Interviews with the design engineer, the design manager and the project manager confirmed their familiarity with these procedural requirements. Review of selected design records for the modification, including both the original and final shoring designs, verified these procedures were utilized and demonstrated that ENVY was performing the required oversight and reviews prior to acceptance of contractor design documents, including subsequent revisions to those documents. During a physical walk-down of the excavation site it was noted that the piping in its current condition was unsupported. The design manager indicated that a calculation was performed to verify that temporary supports were not required. A review of design records confirmed that a calculation supporting this conclusion was performed by an ENVY contractor and that the calculation was properly reviewed and accepted by ENVY design engineering.

Maintenance provided the contractor oversight of the work force performing the excavation. Procedure EN-MA-126 defines the process and requirements for managing supplemental personnel including contractors. This procedure includes requirements to ensure that work is performed safely and in accordance with ENVY procedures and policies. The procedure also determines the level of supervisory involvement based on the risk level of the work activity. The excavation was conducted around the clock, and it was stated that maintenance provided round the clock supervision. It was also stated that a maintenance representative was at the excavation site approximately 60% of the time during the night shift, 70% during the day shift, and 100% during critical times. The excavation was executed safely and in a controlled and methodical fashion which supports the claim of adequate contractor oversight. Maintenance also provided contractor briefings and training when required. Maintenance intends to provide the same level of oversight during the backfilling phase of the project. Interviews with the Superintendent of Maintenance Support determined that he is knowledgeable in the procedural requirements, that the procedure is being applied to the AOG excavation work, and that his organization exercises appropriate contractor oversight for the work being performed.

3.5.2 Temporary Design Modifications

The excavation for the AOG piping leak is an ongoing activity and is being performed as a temporary modification under EC-20014. This temporary modification is controlled by ENVY procedure EN-DC-115, Engineering Change Process. Interviews with design engineers and managers confirmed their knowledge of requirements of this procedure. Review of selected design documents from the modification package confirmed that the presence of safety-related piping and a safety-related duct bank in the excavation area was recognized and appropriately planned. This temporary modification conforms to the procedural requirements of EN-DC-115. Design documents are being properly controlled and reviewed, and calculations are being performed and reviewed in accordance with procedure EN-DC-115.

The actual excavation work is being performed in accordance with ENVY procedure EN-IS-112, Revision 6, Trenching, Excavating and Ground Penetrating Activities. EN-IS-112 requires that all excavations deeper than one foot be controlled by a work order and that an Excavation Permit be prepared. A review of the Excavation Permit #2010-007, Revision 2, determined that Engineering prepared and provided the required input to the work order and to the work permit. EN-IS-112 also requires that shoring be provided for all excavations deeper than five feet and that the shoring is designed by a Registered Professional Engineer. The piping in question is located 12 feet below grade. Shoring has been provided for the excavation and the shoring design was performed by a Registered Professional Engineer from one of ENVY's contractors, Mabey Bridge & Shore. EN-IS-112 requires that engineering specify the backfilling and compaction requirements and that the excavation be restored to its original compaction conditions or alternate requirements specified by engineering. These backfilling and compaction requirements have not yet been specified. Engineering is also required to sign off on the permit close-out.

3.5.3 Engineering Design Work-at-Risk Activities

In the 2008 CRA Report, improper use of the Work-at-Risk process was also identified as an issue. That process had been applied to Cooling Tower work that in the assessment team's judgment was too complex for Work-at-Risk. This assessment included a review of the use of the Work-at-Risk process as it pertains to the excavation to locate the AOG leak.

EN-DC-115 allows for Work-at-Risk to be done in order to minimize work stoppages for minor field changes. The procedure specifies the conditions under which Work-at-Risk can be utilized. Work-at-Risk is not used for altering the basic design function or changing the design basis of a system, structure, or component, or for complex work activities. Work-at-Risk requires the Design Engineering Manager's approval before it can proceed.

A review of the modification package for the excavation determined that a total of three Work-at-Risk activities were prepared for this project. The first two Work-at-Risk activities were precipitated by the excavation being performed in close proximity to a safety-related electrical duct bank. The duct bank contains the safety-related power supply to Fuel Oil transfer pump

P92-1B. The excavation created the potential for the soil below the duct bank to be disturbed, potentially causing loss of vertical support. The first Work-at-Risk activity, WAR-1, documented in WO No. 219750-11, provided temporary vertical support for the duct bank utilizing cribbing, a steel wide-flange beam, and basket-hitch type rigging assemblies. As the excavation proceeded and the size of the excavation increased, the length of the temporary vertical support needed to be increased. This precipitated the need for the second Work-at-Risk activity, WAR-2, which is documented in WO No. 219750-15. The SR Assessment Team reviewed both Work-at-Risk documents and verified they included appropriate sketches and calculations to support the work and that they were reviewed and approved by the Design Engineering Manager as required by procedure.

The third Work at Risk activity, WAR-3, was precipitated by the need to minimize the exposure of the excavation site to winter weather conditions. It allows for the installation of a temporary structure to enclose the excavation area. The details are documented in WO No. 219750-06. The SR Assessment Team also reviewed this Work-at-Risk document and verified that it included appropriate sketches and calculations to support the work, and that it was reviewed and approved by the Design Engineering Manager as required by procedure.

A review of the Work-at-Risk documentation determined that the appropriate managerial reviews and approvals were conducted prior to proceeding with Work-at-Risk, and that the Work-at-Risk process was appropriately applied. The application of the Work-at-Risk concept is reasonable for these work activities, appropriate management oversight was exhibited and the work was properly controlled.

In summary, the design of the excavation project is being performed in accordance with ENVY procedures, proper design controls are in place, there is adequate contractor oversight, and the Work-at-Risk process is being appropriately utilized and implemented.

3.5.4 Long Term Repair Plans

ENVY is in the process of completing a Root Cause Analysis (RCA) of the tritium leak and has not yet determined the long range repair plans. As part of the RCA analysis ENVY should identify long-term plans to improve methods for detection and repair of underground piping leaks.

3.6 Leak Event Corrective Action

3.6.1 Cause Analysis

ENVY is in the process of completing a Root Cause Analysis (RCA) of the tritium leak and has not yet completed the cause analysis.

3.6.2 Management of Extent of Condition

ENVY has determined the source of the tritium leakage to be from two sources, one in the "A" recombiner steam trap drain line, and one in the "B" recombiner steam trap drain line. The leak in the "A" recombiner steam trap drain line was visually confirmed using a camera on a Remotely Operated Vehicle (ROV). The leak in the "B" recombiner steam trap drain line has not been visually confirmed. The flow out of the pipe tunnel decreased from approximately 100 gallons per day (gpd) to near zero after the "A" line was taken out of service.

The leakage rate from the "B" recombiner steam trap drain line is not known because this line was isolated before any flow rate testing was done and has since been rerouted bypassing the leak in the pipe tunnel.

Immediate Corrective Actions

ENVY has rerouted the "A" and "B" recombiner steam trap drain lines to a floor drain.

A temporary pump run-timer was installed on the sump in the AOG Drain Tank Building. ENVY plans to make this a permanent installation in order to monitor sump pump run-times.

The clogged drain in the AOG pipe tunnel was cleared by blowing air in the pipe from the AOG drain pit back into the tunnel.

Interim Corrective Actions

During RFO 28 which starts toward the end of April, 2010, the two recombiner steam trap drain lines, which pass through the pipe tunnel, will be permanently rerouted. ENVY plans to install these lines in buildings and structures that will be readily accessible.

Until long term corrective actions can be put in place to prevent similar water leakage events, other interim actions should be considered to assure that leaks are detected before they get in to the ground water. This could include actions such as assuring that other drains are not clogged, monitoring sump run times, and assuring that sumps are operating correctly. This is a watch area for ENVY.

Long-Term Corrective Actions

ENVY has not yet determined the specific long-term actions it will take for underground piping, pipe tunnels, sumps, and other areas that may be impacted by potential leaks. They are identifying and considering the accessibility of areas to determine long-term corrective action. Some areas will only be accessible during outages, such as the Circulating Water pipe tunnel. Other areas, such as the pipe tunnel where the leaks occurred, may never be readily accessible.

ENVY is in the process of completing a Root Cause Analysis (RCA) which should determine what actions to take for infrequently accessed and inaccessible areas. As part of the RCA analysis ENVY will identify other piping that may be susceptible to similar failure mechanisms as the AOG piping, identify all pipe tunnels, and actions to address clogged drains.

In addition, ENVY is considering the following monitoring and mitigating activities for inaccessible areas: installing cameras to provide remote visual observation; cutting access ports to provide easier entry; using Remotely Operated Vehicles to monitor difficult to enter or high radiation areas; installing timers on sump pumps which do not have them and improving sump monitoring; and, re-routing lines to provide access.

Although ENVY is considering these options, decisions will be based on the outcome of the Root Cause Evaluation. ENVY expects the decisions on how to proceed will be made in approximately 90 days from April 1, 2010.

In addition to the above actions by ENVY, the SR Assessment Team conducted a supplemental search of Condition Reports (CRs) beyond those identified under Criterion 13 – Corrective Action Program. The purpose of the search was to look for adverse trends associated with leaks and clogged drains. CRs were searched for a 10 year period starting at 2000. Search criteria were used to identify pipe leaks, clogged drains, sump debris, and underground pipes. No significant trends were identified as a result of the search.

It is not possible to determine the extent of condition for the two pipe leaks in the AOG tunnel at this time since ENVY has not completed the RCA and determined the future actions. Future monitoring activities should review and assess ENVY's corrective actions to determine if extent of condition has been adequately addressed.

3.7 Summary Conclusions

Based on the reviews and interviews conducted the assessment team's conclusions concerning the AOG leak event are summarized below.

ENVY's activities related to locating and excavating the AOG leaks were timely, appropriate, and planned effectively. Significant resources were dedicated to determining the source of the leaks, and an investigative plan was developed and executed with sufficient resources to determine the source of the leak. A root cause analysis was initiated which should identify the cause of the leaks and recommend corrective actions. Management oversight was evident during the leak investigation and excavation.

An Extent of Condition evaluation is being performed by ENVY. The evaluation is scheduled to be completed by the end of June, 2010. Considering there is a unit refueling outage during that time period, the schedule appears reasonable. The Extent of Condition evaluation is intended to determine the vulnerability of the plant to similar leaks and should define the interim and long-term actions necessary to detect and prevent similar leaks in the future. The occurrence of the

leaks underscores the need to more proactively determine plant vulnerability to similar leaks. While the occurrence of the leaks is not in and of itself indicative of a lack of management oversight, more management attention needs to be applied to detect future leaks at an early stage.

Until the interim and long term corrective actions are implemented to prevent and detect similar leaks, it is the SR Assessment Team's judgment that the plant is potentially susceptible to this type of leakage and considers this a challenge to continued plant reliability.

In the 2008 NSA CRA report, contractor oversight was determined to be a watch area. During the excavation of the AOG leak contractor oversight was determined to be adequate.

In the 2008 NSA CRA report the use of the "Work at Risk" process was also determined to be a watch area. During the excavation of the AOG leak use of the "Work at Risk" process was determined to be adequately and appropriately applied.

Although the AOG leak investigation and repair was a significant event, it did not affect the overall reliability of the plant. To ensure that long term reliability is not impacted ENVY should increase its focus and improve its methods and practices for identifying plant leaks at an early stage through more effective monitoring. Specifically this is associated with all underground piping (including buried piping) and piping that is not readily accessible for inspection.

3.8 References

Procedures

1. EN-DC-115, Engineering Change Process
2. EN-DC-126, Engineering Calculation Process
3. EN-DC-149, Acceptance of Vendor Documents
4. EN-IS-112, Trenching, Excavating and Ground Penetrating Activities
5. EN-MA-126, Control of Supplemental Personnel

Documents

1. Modification Package EC – 20014
2. WO- 219750-06
3. WO – 219750-11
4. WO – 219750-15

4.0 Appendix 2: Underground Piping Definition

A standard definition that is recognized by the nuclear industry, NEI, INPO, EPRI, and the NRC does not exist. Over the past few years a great deal of effort to develop a common set of definitions has occurred and while there has been no standard definition created there are general industry terms that provide guidance for the definition. To establish clarity of terms referenced in this report NSA has applied the following definition for "underground piping" including "buried piping" as a subset of underground piping

<u>Underground Piping Definition</u>

A pipe or any part of a pipe that is below grade level and external to a building, including but not limited to:

- A pipe contained within a trough, tunnel or duct (refer to Figure 4)
- A pipe that is inside of a protective sleeve, such as a pipe within a pipe (refer to Figure 5)
- Buried piping (a subset of underground piping) that includes:
  - A pipe (including any pipe coating) that is either directly in contact with soil or,
  - A pipe directly encased in concrete material and beneath the soil.

  (Note: Pipe coatings are considered part of the pipe[10])

The buried pipe definition, as part of underground piping, is consistent with the current definition applied by Entergy and ENVY for "buried section" pipe.

Pipe Trench
(not included in the ENVY BPTIP Program)

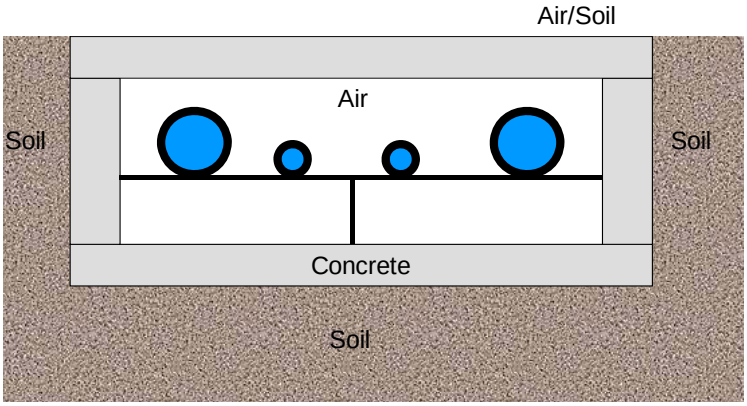

Figure 4: Pipe Trench

[10] This definition of "underground pipe" was arrived at by the DPS and the POP with NSA input into the discussion.

Piping Not in Contact with Soil
(not included in the ENVY BPTIP Program)

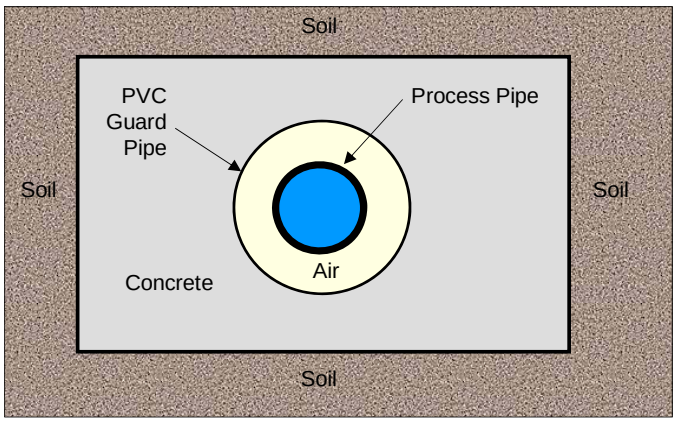

Figure 5: Piping Not in Contact with Soil

Piping in Contact with Soil or Concrete
(included in the ENVY BPTIP Program)

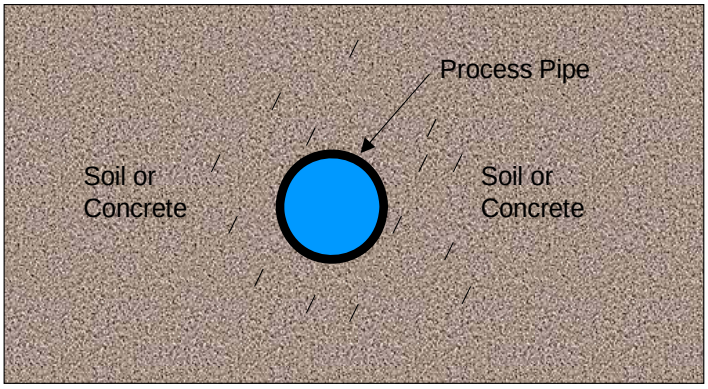

Figure 6: Piping in Contact with Soil or Concrete

5.0 Appendix 3: Reliability Significance Definitions

Reliability Significance Definitions

Throughout the report, the NSA team commented on ENVY levels of performance regarding numerous managerial and technical areas. Definitions of terms used by NSA team members are as follows

Good Practice: Managerial or technical area that was determined to be consistent with industry good practices that support plant and equipment reliability.

Meets Industry Standards: Managerial or technical area that was determined to be consistent with industry standard practices that support plant and equipment reliability.

Watch Area: Pertains to issues identified for which management is aware, however without appropriate focus, there exists a potential for future effect on plant and/or equipment reliability.

Challenge: Increased management focus or additional corrective actions are recommended. If this does not occur, future plant and/or equipment reliability could be affected.

6.0 ACRONYMS

ACRONYMS	DESCRIPTION
ACE	Apparent Cause Evaluation
AEC	Atomic Energy Commission
AFI	Area For Improvement
ANSI	American National Standards Institute
AO	Auxiliary Operator
AOG	Advanced Off-Gas
AOR	Auxiliary Operator Requalification
AOV	Air Operated Valve
API	American petroleum Institute
ASME	American Society of Mechanical Engineers
ASTM	American Society for Testing & Materials
AWWA	American Water Works Association
BPTIP	Buried Pipe and Tank Inspection Program
BOP	Balance of Plant
BWR	Boiling Water Reactor
CA	Corrective Action
CA&A	Corrective Action & Assessment
CAP	Corrective Action Program
CARB	Corrective Action Review Board
CDBI	Component Design Basis Inspection
CM	Configuration Management
CMMS	Computerized Maintenance Management System
CR	Condition Report
CRA	Comprehensive Reliability Assessment
CRG	Condition Review Group
CRS	Condition Reporting System
DBD	Design Basis Document
DPIC	Department Process Improvement Coordinator
DPS	Department of Public Service
DR	Discrepancy Report
ECR	Engineering Change Request
ENVY	Entergy Nuclear Vermont Yankee
EPRI	Electric Power Research Institute
EPU	Extended Power Uprate
EQ	Environmental Qualification
ER	Engineering Request
ERFIS	Emergency Response Facility Information System
ERI	ER Index
ERWG	Equipment Reliability Working Group
eSOMS	Electronic Shift Operations Management System

ACRONYMS	DESCRIPTION
ESP	Engineering & Support Personnel
FAC	Flow Accelerated Corrosion
FIN	Fix It Now
FME	Foreign Material Exclusion
FSAR	Final Safety Analysis Report
HHB	House Heating Boiler
HP	Human Performance
HPER	Human Performance Error Review
I&C	Instrumentation & Controls
IAS	Indus Asset Suite
IAW	In Accordance With
ID	Inside Diameter
IDDEAL	IDDEAL Concept Software
IEEE	Institute of Electrical & Electronic Engineering
IG	Instructor Guide
INPO	Institute of Nuclear Power Operations
LCO	License Condition for Operation
LCV	Level Control Valve
LERs	Licensee Event Reports
LOR	Licensed Operator Requalification
LTAM	Long Term Asset Management
LTCA	Long Term Corrective Actions
MCC	Motor Control Center
MIC	Microbiologically Influenced Corrosion
MOD	Modification
MOV	Motor Operated Valve
MPRC	Modification/Project Review Committee
MRFFS	Maintenance Rule Functional Failures
MRM	Management Review Meeting
MRP	Motor Replacement Program
MSIV	Main Steam Isolation Valve
Mwt	Megawatts Thermal
NEI	Nuclear Electric Institute
NRC	Nuclear Regulatory Commission
NRR	Nuclear Regulation Review
NSA	Nuclear Safety Associates
NSSS	Nuclear Steam Supply System
NUMARC	Nuclear Management & Resource Council
OBE	Operating Basis Earthquake
OD	Outside Diameter
ODMI	Organizational Decision Making Instruction
OE	Operating Experience
OIRD	Obsolete Inventory Replacement Database

ACRONYMS	DESCRIPTION
OJT	On the Job Training
P&IDs	Piping & Instrument Diagrams
PCR	Procedure Change Request
PCRS	Paperless Condition Reporting System
PdM	Predictive Maintenance Program
PI	Performance Indicators
PM	Preventive Maintenance
PMOS	Preventive Maintenance Optimization System
POP	Public Oversight Panel
QA	Quality Assurance
RCA	Root Cause Analysis
RCAR	Root Cause Analysis Report
RFO	Refuel Outage
RG	Regulatory Guide
RHR	Residual Heat Removal
RHRSW	Residual Heat Removal Service Water
RPS	Reactor Protection System
RX	Reactor
SA	Supplemental Assessment
SARB	Safety Analysis Review Board
SCFM	Standard Cubic Feet per Minute
SBO	Station Blackout
SECY	NRC Office of the Secretary (SECY)
SER	Safety Evaluation Report
SIPD	Site Integrated Planning Database
SPV	Single Point of Vulnerability
SR	Supplemental Report
SRO	Senior Reactor Operator
SRP	Standard Review Plan
SSE	Safe Shutdown earthquake
STA	Shift Technical Advisor
SW	Service Water
TEAR	Training Evaluation and Action Request
TM	Temporary Modification
TOC	Training Oversight Committee
TPE	Training Performance Evaluations
TRG	Training Review Group
TS	Technical Specification
TSV	Turbine Stop Valve
UFSAR	Updated Final Safety Analysis Report
URT	Unit Reliability Team
VY	Vermont Yankee
WO	Work Order

ACRONYMS	DESCRIPTION
WR	Work Request
WSCI	WSC International
WWM	Work Week Manager

7.0 Attachments

7.1 Attachment 1: List of Tables

TABLE 1: PERFORMANCE AREAS 18
TABLE 2: OVERALL SYSTEM HEALTH 20
TABLE 3: OBSOLETE ITEM/RESOLUTION PROJECT 22
TABLE 4: TABLE OF SPV ISSUES FOR AOG 23
TABLE 5: LEAK HISTORY ..... **ERROR! BOOKMARK NOT DEFINED.**
TABLE 6: EVENT TIMELINE FOR CR 2010-00069 76
TABLE 7: SUBSEQUENT EVENTS TIMELINE (HIGHLIGHTS) 84

7.2 Attachment 2: Table of Figures

FIGURE 1: MAJOR SYSTEM COMPONENTS 2
FIGURE 2: LOCATION OF MONITORING WELLS AND TRITIUM PLUME 82
FIGURE 3: CHART OF BASIC TROUBLESHOOTING APPROACH 83
FIGURE 4: PIPE TRENCH 96
FIGURE 5: PIPING NOT IN CONTACT WITH SOIL 97
FIGURE 6: PIPING IN CONTACT WITH SOIL OR CONCRETE 97